APPENDIX A – AIR QUALITY WORKSHEETS

THIS PAGE HAS BEEN INTENTIONALLY LEFT BLANK.

Hickson Street

Los Angeles-South Coast County, Summer

1.0 Project Characteristics

1.1 Land Usage

Land Uses	Size	Metric	Lot Acreage	Floor Surface Area	Population
Unrefrigerated Warehouse-No Rail	33.05	1000sqft	0.76	33,050.00	0
Unrefrigerated Warehouse-No Rail	32.06	1000sqft	0.74	32,061.00	0
Parking Lot	99.00	Space	0.89	39,600.00	0

1.2 Other Project Characteristics

Urbanization	Urban	**Wind Speed (m/s)**	2.2	**Precipitation Freq (Days)**	33
Climate Zone	9			**Operational Year**	2016
Utility Company	Southern California Edison				
CO2 Intensity (lb/MWhr)	630.89	**CH4 Intensity (lb/MWhr)**	0.029	**N2O Intensity (lb/MWhr)**	0.006

1.3 User Entered Comments & Non-Default Data

Project Characteristics -

Land Use -

Construction Phase - Construction times dicussed in MND

Architectural Coating - Per SCAQMD guidelines governing VOC content.

Table Name	Column Name	Default Value	New Value
tblArchitecturalCoating	EF_Nonresidential_Exterior	250.00	150.00
tblArchitecturalCoating	EF_Nonresidential_Interior	250.00	150.00
tblConstructionPhase	NumDays	10.00	21.00
tblConstructionPhase	NumDays	220.00	108.00
tblConstructionPhase	NumDays	20.00	10.00
tblConstructionPhase	NumDays	6.00	23.00
tblConstructionPhase	NumDays	10.00	23.00
tblConstructionPhase	NumDays	3.00	10.00
tblConstructionPhase	PhaseEndDate	4/29/2016	4/30/2016
tblConstructionPhase	PhaseEndDate	8/14/2015	8/15/2015
tblConstructionPhase	PhaseEndDate	8/28/2015	8/29/2015
tblGrading	AcresOfGrading	11.50	3.00
tblGrading	AcresOfGrading	15.00	4.50
tblProjectCharacteristics	OperationalYear	2014	2016

2.0 Emissions Summary

2.1 Overall Construction (Maximum Daily Emission)

Unmitigated Construction

	ROG	NOx	CO	SO2	Fugitive PM10	Exhaust PM10	PM10 Total	Fugitive PM2.5	Exhaust PM2.5	PM2.5 Total	Bio- CO2	NBio- CO2	Total CO2	CH4	N2O	CO2e
Year	lb/day										lb/day					
2015	4.4066	32.5195	23.0506	0.0350	6.2722	1.8666	8.0257	3.3548	1.7483	4.9651	0.0000	3,301.9571	3,301.9571	0.7546	0.0000	3,317.8035
2016	44.3083	26.3663	21.4972	0.0350	0.5975	1.6537	2.2515	0.1606	1.5825	1.7431	0.0000	3,267.3683	3,267.3683	0.5742	0.0000	3,279.4260
Total	48.7149	58.8858	44.5478	0.0701	6.8700	3.5202	10.2772	3.5154	3.3308	6.7112	0.0000	6,569.3253	6,569.3253	1.3288	0.0000	6,597.2298

Mitigated Construction

	ROG	NOx	CO	SO2	Fugitive PM10	Exhaust PM10	PM10 Total	Fugitive PM2.5	Exhaust PM2.5	PM2.5 Total	Bio- CO2	NBio- CO2	Total CO2	CH4	N2O	CO2e
Year	lb/day										lb/day					
2015	4.4066	32.5195	23.0506	0.0350	6.2722	1.8666	8.0257	3.3548	1.7483	4.9651	0.0000	3,301.9571	3,301.9571	0.7546	0.0000	3,317.8035
2016	44.3083	26.3663	21.4972	0.0350	0.5975	1.6537	2.2515	0.1606	1.5825	1.7431	0.0000	3,267.3683	3,267.3683	0.5742	0.0000	3,279.4260
Total	48.7149	58.8858	44.5478	0.0701	6.8700	3.5202	10.2772	3.5154	3.3308	6.7112	0.0000	6,569.3253	6,569.3253	1.3288	0.0000	6,597.2298

	ROG	NOx	CO	SO2	Fugitive PM10	Exhaust PM10	PM10 Total	Fugitive PM2.5	Exhaust PM2.5	PM2.5 Total	Bio- CO2	NBio-CO2	Total CO2	CH4	N20	CO2e
Percent Reduction	0.00	0.00	0.00	0.00	0.00	0.00	0.00	0.00	0.00	0.00	0.00	0.00	0.00	0.00	0.00	0.00

2.2 Overall Operational

Unmitigated Operational

	ROG	NOx	CO	SO2	Fugitive PM10	Exhaust PM10	PM10 Total	Fugitive PM2.5	Exhaust PM2.5	PM2.5 Total	Bio- CO2	NBio- CO2	Total CO2	CH4	N2O	CO2e
Category	lb/day										lb/day					
Area	2.4959	1.6000e-004	0.0172	0.0000		6.0000e-005	6.0000e-005		6.0000e-005	6.0000e-005		0.0359	0.0359	1.0000e-004		0.0361
Energy	1.7500e-003	0.0159	0.0134	1.0000e-004		1.2100e-003	1.2100e-003		1.2100e-003	1.2100e-003		19.0978	19.0978	3.7000e-004	3.5000e-004	19.2141
Mobile	0.7261	2.3501	9.5384	0.0232	1.5344	0.0352	1.5696	0.4103	0.0324	0.4427		2,046.0167	2,046.0167	0.0837		2,047.7747
Total	3.2238	2.3662	9.5689	0.0233	1.5344	0.0365	1.5709	0.4103	0.0337	0.4439		2,065.1504	2,065.1504	0.0842	3.5000e-004	2,067.0268

Mitigated Operational

	ROG	NOx	CO	SO2	Fugitive PM10	Exhaust PM10	PM10 Total	Fugitive PM2.5	Exhaust PM2.5	PM2.5 Total	Bio- CO2	NBio- CO2	Total CO2	CH4	N2O	CO2e
Category	lb/day										lb/day					
Area	2.4959	1.6000e-004	0.0172	0.0000		6.0000e-005	6.0000e-005		6.0000e-005	6.0000e-005		0.0359	0.0359	1.0000e-004		0.0361
Energy	1.7500e-003	0.0159	0.0134	1.0000e-004		1.2100e-003	1.2100e-003		1.2100e-003	1.2100e-003		19.0978	19.0978	3.7000e-004	3.5000e-004	19.2141
Mobile	0.7261	2.3501	9.5384	0.0232	1.5344	0.0352	1.5696	0.4103	0.0324	0.4427		2,046.0167	2,046.0167	0.0837		2,047.7747
Total	3.2238	2.3662	9.5689	0.0233	1.5344	0.0365	1.5709	0.4103	0.0337	0.4439		2,065.1504	2,065.1504	0.0842	3.5000e-004	2,067.0268

	ROG	NOx	CO	SO2	Fugitive PM10	Exhaust PM10	PM10 Total	Fugitive PM2.5	Exhaust PM2.5	PM2.5 Total	Bio- CO2	NBio-CO2	Total CO2	CH4	N20	CO2e
Percent Reduction	0.00	0.00	0.00	0.00	0.00	0.00	0.00	0.00	0.00	0.00	0.00	0.00	0.00	0.00	0.00	0.00

3.0 Construction Detail

Construction Phase

Phase Number	Phase Name	Phase Type	Start Date	End Date	Num Days Week	Num Days	Phase Description
1	Demolition	Demolition	8/1/2015	8/15/2015	5	10	
2	Site Preparation	Site Preparation	8/16/2015	8/29/2015	5	10	
3	Grading	Grading	8/30/2015	9/30/2015	5	23	
4	Building Construction	Building Construction	10/1/2015	2/29/2016	5	108	
5	Paving	Paving	3/1/2016	3/31/2016	5	23	
6	Architectural Coating	Architectural Coating	4/1/2016	4/30/2016	5	21	

Acres of Grading (Site Preparation Phase): 4.5

Acres of Grading (Grading Phase): 3

Acres of Paving: 0

Residential Indoor: 0; Residential Outdoor: 0; Non-Residential Indoor: 99,449; Non-Residential Outdoor: 33,150 (Architectural Coating – sqft)

OffRoad Equipment

Phase Name	Offroad Equipment Type	Amount	Usage Hours	Horse Power	Load Factor
Architectural Coating	Air Compressors	1	6.00	78	0.48
Paving	Cement and Mortar Mixers	1	6.00	9	0.56
Demolition	Concrete/Industrial Saws	1	8.00	81	0.73
Building Construction	Generator Sets	1	8.00	84	0.74
Building Construction	Cranes	1	8.00	226	0.29
Building Construction	Forklifts	2	7.00	89	0.20
Site Preparation	Graders	1	8.00	174	0.41
Paving	Pavers	1	8.00	125	0.42
Paving	Rollers	2	8.00	80	0.38
Demolition	Rubber Tired Dozers	1	8.00	255	0.40
Grading	Rubber Tired Dozers	1	8.00	255	0.40
Building Construction	Tractors/Loaders/Backhoes	1	6.00	97	0.37
Demolition	Tractors/Loaders/Backhoes	3	8.00	97	0.37
Grading	Tractors/Loaders/Backhoes	2	7.00	97	0.37
Paving	Tractors/Loaders/Backhoes	1	8.00	97	0.37
Site Preparation	Tractors/Loaders/Backhoes	1	7.00	97	0.37
Grading	Graders	1	8.00	174	0.41
Paving	Paving Equipment	1	8.00	130	0.36
Site Preparation	Scrapers	1	8.00	361	0.48
Building Construction	Welders	3	8.00	46	0.45

Trips and VMT

Phase Name	Offroad Equipment Count	Worker Trip Number	Vendor Trip Number	Hauling Trip Number	Worker Trip Length	Vendor Trip Length	Hauling Trip Length	Worker Vehicle Class	Vendor Vehicle Class	Hauling Vehicle Class
Demolition	5	13.00	0.00	0.00	14.70	6.90	20.00	LD_Mix	HDT_Mix	HHDT
Site Preparation	3	8.00	0.00	0.00	14.70	6.90	20.00	LD_Mix	HDT_Mix	HHDT
Grading	4	10.00	0.00	0.00	14.70	6.90	20.00	LD_Mix	HDT_Mix	HHDT
Building Construction	8	44.00	17.00	0.00	14.70	6.90	20.00	LD_Mix	HDT_Mix	HHDT
Paving	6	15.00	0.00	0.00	14.70	6.90	20.00	LD_Mix	HDT_Mix	HHDT
Architectural Coating	1	9.00	0.00	0.00	14.70	6.90	20.00	LD_Mix	HDT_Mix	HHDT

3.1 Mitigation Measures Construction

3.2 Demolition - 2015

Unmitigated Construction On-Site

	ROG	NOx	CO	SO2	Fugitive PM10	Exhaust PM10	PM10 Total	Fugitive PM2.5	Exhaust PM2.5	PM2.5 Total	Bio- CO2	NBio- CO2	Total CO2	CH4	N2O	CO2e
Category	lb/day										lb/day					
Off-Road	3.0666	29.6778	22.0566	0.0245		1.8651	1.8651		1.7469	1.7469		2,509.0599	2,509.0599	0.6357		2,522.4104
Total	3.0666	29.6778	22.0566	0.0245		1.8651	1.8651		1.7469	1.7469		2,509.0599	2,509.0599	0.6357		2,522.4104

3.2 Demolition - 2015

Unmitigated Construction Off-Site

	ROG	NOx	CO	SO2	Fugitive PM10	Exhaust PM10	PM10 Total	Fugitive PM2.5	Exhaust PM2.5	PM2.5 Total	Bio- CO2	NBio- CO2	Total CO2	CH4	N2O	CO2e
Category	lb/day										lb/day					
Hauling	0.0000	0.0000	0.0000	0.0000	0.0000	0.0000	0.0000	0.0000	0.0000	0.0000		0.0000	0.0000	0.0000		0.0000
Vendor	0.0000	0.0000	0.0000	0.0000	0.0000	0.0000	0.0000	0.0000	0.0000	0.0000		0.0000	0.0000	0.0000		0.0000
Worker	0.0641	0.0806	0.9940	1.8900e-003	0.1453	1.4500e-003	0.1468	0.0385	1.3300e-003	0.0399		165.2848	165.2848	9.4300e-003		165.4829
Total	0.0641	0.0806	0.9940	1.8900e-003	0.1453	1.4500e-003	0.1468	0.0385	1.3300e-003	0.0399		165.2848	165.2848	9.4300e-003		165.4829

Mitigated Construction On-Site

	ROG	NOx	CO	SO2	Fugitive PM10	Exhaust PM10	PM10 Total	Fugitive PM2.5	Exhaust PM2.5	PM2.5 Total	Bio- CO2	NBio- CO2	Total CO2	CH4	N2O	CO2e
Category	lb/day										lb/day					
Off-Road	3.0666	29.6778	22.0566	0.0245		1.8651	1.8651		1.7469	1.7469	0.0000	2,509.0599	2,509.0599	0.6357		2,522.4104
Total	3.0666	29.6778	22.0566	0.0245		1.8651	1.8651		1.7469	1.7469	0.0000	2,509.0599	2,509.0599	0.6357		2,522.4104

3.2 Demolition - 2015

Mitigated Construction Off-Site

	ROG	NOx	CO	SO2	Fugitive PM10	Exhaust PM10	PM10 Total	Fugitive PM2.5	Exhaust PM2.5	PM2.5 Total	Bio- CO2	NBio- CO2	Total CO2	CH4	N2O	CO2e
Category	lb/day										lb/day					
Hauling	0.0000	0.0000	0.0000	0.0000	0.0000	0.0000	0.0000	0.0000	0.0000	0.0000		0.0000	0.0000	0.0000		0.0000
Vendor	0.0000	0.0000	0.0000	0.0000	0.0000	0.0000	0.0000	0.0000	0.0000	0.0000		0.0000	0.0000	0.0000		0.0000
Worker	0.0641	0.0806	0.0940	1.8900e-003	0.1453	1.4500e-003	0.1468	0.0385	1.3300e-003	0.0399		165.2848	165.2848	9.4300e-003		165.4829
Total	0.0641	0.0806	0.0940	1.8900e-003	0.1453	1.4500e-003	0.1468	0.0385	1.3300e-003	0.0399		165.2848	165.2848	9.4300e-003		165.4829

3.3 Site Preparation - 2015

Unmitigated Construction On-Site

	ROG	NOx	CO	SO2	Fugitive PM10	Exhaust PM10	PM10 Total	Fugitive PM2.5	Exhaust PM2.5	PM2.5 Total	Bio- CO2	NBio- CO2	Total CO2	CH4	N2O	CO2e
Category	lb/day										lb/day					
Fugitive Dust					0.4772	0.0000	0.4772	0.0515	0.0000	0.0515			0.0000			0.0000
Off-Road	2.8203	32.4699	18.6797	0.0239		1.5973	1.5973		1.4695	1.4695		2,508.198 3	2,508.198 3	0.7488		2,523.923 1
Total	2.8203	32.4699	18.6797	0.0239	0.4772	1.5973	2.0745	0.0515	1.4695	1.5211		2,508.198 3	2,508.198 3	0.7488		2,523.923 1

3.3 Site Preparation - 2015

Unmitigated Construction Off-Site

	ROG	NOx	CO	SO2	Fugitive PM10	Exhaust PM10	PM10 Total	Fugitive PM2.5	Exhaust PM2.5	PM2.5 Total	Bio- CO2	NBio- CO2	Total CO2	CH4	N2O	CO2e
Category	lb/day										lb/day					
Hauling	0.0000	0.0000	0.0000	0.0000	0.0000	0.0000	0.0000	0.0000	0.0000	0.0000		0.0000	0.0000	0.0000		0.0000
Vendor	0.0000	0.0000	0.0000	0.0000	0.0000	0.0000	0.0000	0.0000	0.0000	0.0000		0.0000	0.0000	0.0000		0.0000
Worker	0.0395	0.0496	0.6117	1.1600e-003	0.0894	8.9000e-004	0.0903	0.0237	8.2000e-004	0.0245		101.7137	101.7137	5.8000e-003		101.8356
Total	0.0395	0.0496	0.6117	1.1600e-003	0.0894	8.9000e-004	0.0903	0.0237	8.2000e-004	0.0245		101.7137	101.7137	5.8000e-003		101.8356

Mitigated Construction On-Site

	ROG	NOx	CO	SO2	Fugitive PM10	Exhaust PM10	PM10 Total	Fugitive PM2.5	Exhaust PM2.5	PM2.5 Total	Bio- CO2	NBio- CO2	Total CO2	CH4	N2O	CO2e
Category	lb/day										lb/day					
Fugitive Dust					0.4772	0.0000	0.4772	0.0515	0.0000	0.0515			0.0000			0.0000
Off-Road	2.8203	32.4699	18.6797	0.0239		1.5973	1.5973		1.4695	1.4695	0.0000	2,508.198 3	2,508.198 3	0.7488		2,523.923 1
Total	2.8203	32.4699	18.6797	0.0239	0.4772	1.5973	2.0745	0.0515	1.4695	1.5211	0.0000	2,508.198 3	2,508.198 3	0.7488		2,523.923 1

3.3 Site Preparation - 2015

Mitigated Construction Off-Site

	ROG	NOx	CO	SO2	Fugitive PM10	Exhaust PM10	PM10 Total	Fugitive PM2.5	Exhaust PM2.5	PM2.5 Total	Bio- CO2	NBio- CO2	Total CO2	CH4	N2O	CO2e
Category	lb/day										lb/day					
Hauling	0.0000	0.0000	0.0000	0.0000	0.0000	0.0000	0.0000	0.0000	0.0000	0.0000		0.0000	0.0000	0.0000		0.0000
Vendor	0.0000	0.0000	0.0000	0.0000	0.0000	0.0000	0.0000	0.0000	0.0000	0.0000		0.0000	0.0000	0.0000		0.0000
Worker	0.0395	0.0496	0.6117	1.1600e-003	0.0894	8.9000e-004	0.0903	0.0237	8.2000e-004	0.0245		101.7137	101.7137	5.8000e-003		101.8356
Total	0.0395	0.0496	0.6117	1.1600e-003	0.0894	8.9000e-004	0.0903	0.0237	8.2000e-004	0.0245		101.7137	101.7137	5.8000e-003		101.8356

3.4 Grading - 2015

Unmitigated Construction On-Site

	ROG	NOx	CO	SO2	Fugitive PM10	Exhaust PM10	PM10 Total	Fugitive PM2.5	Exhaust PM2.5	PM2.5 Total	Bio- CO2	NBio- CO2	Total CO2	CH4	N2O	CO2e
Category	lb/day										lb/day					
Fugitive Dust					6.1604	0.0000	6.1604	3.3252	0.0000	3.3252			0.0000			0.0000
Off-Road	2.9656	31.2611	20.2019	0.0206		1.7524	1.7524		1.6122	1.6122		2,164.1012	2,164.1012	0.6461		2,177.6687
Total	2.9656	31.2611	20.2019	0.0206	6.1604	1.7524	7.9128	3.3252	1.6122	4.9374		2,164.1012	2,164.1012	0.6461		2,177.6687

3.4 Grading - 2015

Unmitigated Construction Off-Site

	ROG	NOx	CO	SO2	Fugitive PM10	Exhaust PM10	PM10 Total	Fugitive PM2.5	Exhaust PM2.5	PM2.5 Total	Bio- CO2	NBio- CO2	Total CO2	CH4	N2O	CO2e
Category	lb/day										lb/day					
Hauling	0.0000	0.0000	0.0000	0.0000	0.0000	0.0000	0.0000	0.0000	0.0000	0.0000		0.0000	0.0000	0.0000		0.0000
Vendor	0.0000	0.0000	0.0000	0.0000	0.0000	0.0000	0.0000	0.0000	0.0000	0.0000		0.0000	0.0000	0.0000		0.0000
Worker	0.0493	0.0620	0.7646	1.4500e-003	0.1118	1.1200e-003	0.1129	0.0296	1.0200e-003	0.0307		127.1422	127.1422	7.2500e-003		127.2945
Total	0.0493	0.0620	0.7646	1.4500e-003	0.1118	1.1200e-003	0.1129	0.0296	1.0200e-003	0.0307		127.1422	127.1422	7.2500e-003		127.2945

Mitigated Construction On-Site

	ROG	NOx	CO	SO2	Fugitive PM10	Exhaust PM10	PM10 Total	Fugitive PM2.5	Exhaust PM2.5	PM2.5 Total	Bio- CO2	NBio- CO2	Total CO2	CH4	N2O	CO2e
Category	lb/day										lb/day					
Fugitive Dust					6.1604	0.0000	6.1604	3.3252	0.0000	3.3252			0.0000			0.0000
Off-Road	2.9656	31.2611	20.2019	0.0206		1.7524	1.7524		1.6122	1.6122	0.0000	2,164.1012	2,164.1012	0.6461		2,177.6687
Total	2.9656	31.2611	20.2019	0.0206	6.1604	1.7524	7.9128	3.3252	1.6122	4.9374	0.0000	2,164.1012	2,164.1012	0.6461		2,177.6687

3.4 Grading - 2015

Mitigated Construction Off-Site

	ROG	NOx	CO	SO2	Fugitive PM10	Exhaust PM10	PM10 Total	Fugitive PM2.5	Exhaust PM2.5	PM2.5 Total	Bio- CO2	NBio- CO2	Total CO2	CH4	N2O	CO2e
Category	lb/day										lb/day					
Hauling	0.0000	0.0000	0.0000	0.0000	0.0000	0.0000	0.0000	0.0000	0.0000	0.0000		0.0000	0.0000	0.0000		0.0000
Vendor	0.0000	0.0000	0.0000	0.0000	0.0000	0.0000	0.0000	0.0000	0.0000	0.0000		0.0000	0.0000	0.0000		0.0000
Worker	0.0493	0.0620	0.7646	1.4500e-003	0.1118	1.1200e-003	0.1129	0.0296	1.0200e-003	0.0307		127.1422	127.1422	7.2600e-003		127.2945
Total	0.0493	0.0620	0.7646	1.4500e-003	0.1118	1.1200e-003	0.1129	0.0296	1.0200e-003	0.0307		127.1422	127.1422	7.2600e-003		127.2945

3.5 Building Construction - 2015

Unmitigated Construction On-Site

	ROG	NOx	CO	SO2	Fugitive PM10	Exhaust PM10	PM10 Total	Fugitive PM2.5	Exhaust PM2.5	PM2.5 Total	Bio- CO2	NBio- CO2	Total CO2	CH4	N2O	CO2e
Category	lb/day										lb/day					
Off-Road	4.0268	25.8389	17.0465	0.0249		1.7597	1.7597		1.6870	1.6870		2,364.0797	2,364.0797	0.5662		2,375.9701
Total	4.0268	25.8389	17.0465	0.0249		1.7597	1.7597		1.6870	1.6870		2,364.0797	2,364.0797	0.5662		2,375.9701

3.5 Building Construction - 2015

Unmitigated Construction Off-Site

	ROG	NOx	CO	SO2	Fugitive PM10	Exhaust PM10	PM10 Total	Fugitive PM2.5	Exhaust PM2.5	PM2.5 Total	Bio- CO2	NBio- CO2	Total CO2	CH4	N2O	CO2e
Category	lb/day										lb/day					
Hauling	0.0000	0.0000	0.0000	0.0000	0.0000	0.0000	0.0000	0.0000	0.0000	0.0000		0.0000	0.0000	0.0000		0.0000
Vendor	0.1628	1.6810	1.8874	3.7400e-003	0.1060	0.0282	0.1342	0.0302	0.0259	0.0561		378.4519	378.4519	3.0400e-003		378.5157
Worker	0.2170	0.2728	3.3643	6.4000e-003	0.4918	4.9100e-003	0.4967	0.1304	4.5000e-003	0.1349		559.4255	559.4255	0.0319		560.0959
Total	0.3798	1.9537	5.2518	0.0101	0.5978	0.0331	0.6309	0.1606	0.0304	0.1910		937.8773	937.8773	0.0350		938.6116

Mitigated Construction On-Site

	ROG	NOx	CO	SO2	Fugitive PM10	Exhaust PM10	PM10 Total	Fugitive PM2.5	Exhaust PM2.5	PM2.5 Total	Bio- CO2	NBio- CO2	Total CO2	CH4	N2O	CO2e
Category	lb/day										lb/day					
Off-Road	4.0268	25.8389	17.0465	0.0249		1.7597	1.7597		1.6870	1.6870	0.0000	2,364.0797	2,364.0797	0.5662		2,375.9701
Total	4.0268	25.8389	17.0465	0.0249		1.7597	1.7597		1.6870	1.6870	0.0000	2,364.0797	2,364.0797	0.5662		2,375.9701

3.5 Building Construction - 2015

Mitigated Construction Off-Site

	ROG	NOx	CO	SO2	Fugitive PM10	Exhaust PM10	PM10 Total	Fugitive PM2.5	Exhaust PM2.5	PM2.5 Total	Bio- CO2	NBio- CO2	Total CO2	CH4	N2O	CO2e
Category	lb/day										lb/day					
Hauling	0.0000	0.0000	0.0000	0.0000	0.0000	0.0000	0.0000	0.0000	0.0000	0.0000		0.0000	0.0000	0.0000		0.0000
Vendor	0.1628	1.6810	1.8874	3.7400e-003	0.1060	0.0282	0.1342	0.0302	0.0259	0.0561		378.4519	378.4519	3.0400e-003		378.5157
Worker	0.2170	0.2728	3.3643	6.4000e-003	0.4918	4.0100e-003	0.4967	0.1304	4.5000e-003	0.1349		559.4255	559.4255	0.0319		560.0959
Total	0.3798	1.9537	5.2518	0.0101	0.5978	0.0331	0.6309	0.1606	0.0304	0.1910		937.8773	937.8773	0.0350		938.6116

3.5 Building Construction - 2016

Unmitigated Construction On-Site

	ROG	NOx	CO	SO2	Fugitive PM10	Exhaust PM10	PM10 Total	Fugitive PM2.5	Exhaust PM2.5	PM2.5 Total	Bio- CO2	NBio- CO2	Total CO2	CH4	N2O	CO2e
Category	lb/day										lb/day					
Off-Road	3.6984	24.6320	16.7166	0.0249		1.6257	1.6257		1.5569	1.5569		2,352.2239	2,352.2239	0.5420		2,363.6057
Total	3.6984	24.6320	16.7166	0.0249		1.6257	1.6257		1.5569	1.5569		2,352.2239	2,352.2239	0.5420		2,363.6057

3.5 Building Construction - 2016

Unmitigated Construction Off-Site

	ROG	NOx	CO	SO2	Fugitive PM10	Exhaust PM10	PM10 Total	Fugitive PM2.5	Exhaust PM2.5	PM2.5 Total	Bio- CO2	NBio- CO2	Total CO2	CH4	N2O	CO2e
Category	lb/day										lb/day					
Hauling	0.0000	0.0000	0.0000	0.0000	0.0000	0.0000	0.0000	0.0000	0.0000	0.0000		0.0000	0.0000	0.0000		0.0000
Vendor	0.1432	1.4577	1.7254	3.7400e-003	0.1060	0.0233	0.1293	0.0302	0.0214	0.0516		374.3750	374.3750	2.7500e-003		374.4328
Worker	0.1960	0.2466	3.0523	6.4000e-003	0.4918	4.6500e-003	0.4965	0.1304	4.2700e-003	0.1347		540.7694	540.7694	0.0294		541.3876
Total	0.3392	1.7343	4.7806	0.0101	0.5978	0.0279	0.6257	0.1606	0.0257	0.1863		915.1444	915.1444	0.0322		915.8203

Mitigated Construction On-Site

	ROG	NOx	CO	SO2	Fugitive PM10	Exhaust PM10	PM10 Total	Fugitive PM2.5	Exhaust PM2.5	PM2.5 Total	Bio- CO2	NBio- CO2	Total CO2	CH4	N2O	CO2e
Category	lb/day										lb/day					
Off-Road	3.6984	24.6320	16.7166	0.0249		1.6257	1.6257		1.5569	1.5569	0.0000	2,352.2239	2,352.2239	0.5420		2,363.6057
Total	3.6984	24.6320	16.7166	0.0249		1.6257	1.6257		1.5569	1.5569	0.0000	2,352.2239	2,352.2239	0.5420		2,363.6057

3.5 Building Construction - 2016

Mitigated Construction Off-Site

	ROG	NOx	CO	SO2	Fugitive PM10	Exhaust PM10	PM10 Total	Fugitive PM2.5	Exhaust PM2.5	PM2.5 Total	Bio- CO2	NBio- CO2	Total CO2	CH4	N2O	CO2e
Category	lb/day										lb/day					
Hauling	0.0000	0.0000	0.0000	0.0000	0.0000	0.0000	0.0000	0.0000	0.0000	0.0000		0.0000	0.0000	0.0000		0.0000
Vendor	0.1432	1.4577	1.7254	3.7400e-003	0.1060	0.0233	0.1293	0.0302	0.0214	0.0516		374.3750	374.3750	2.7500e-003		374.4328
Worker	0.1960	0.2466	3.0523	6.4000e-003	0.4915	4.6500e-003	0.4965	0.1304	4.2700e-003	0.1347		540.7604	540.7604	0.0294		541.3876
Total	0.3392	1.7343	4.7806	0.0101	0.5978	0.0279	0.6257	0.1606	0.0257	0.1863		915.1444	915.1444	0.0322		915.8203

3.6 Paving - 2016

Unmitigated Construction On-Site

	ROG	NOx	CO	SO2	Fugitive PM10	Exhaust PM10	PM10 Total	Fugitive PM2.5	Exhaust PM2.5	PM2.5 Total	Bio- CO2	NBio- CO2	Total CO2	CH4	N2O	CO2e
Category	lb/day										lb/day					
Off-Road	1.7511	17.9300	12.1433	0.0176		1.1252	1.1252		1.0363	1.0363		1,804.8600	1,804.8600	0.5344		1,816.0828
Paving	0.1014					0.0000	0.0000		0.0000	0.0000			0.0000			0.0000
Total	1.8825	17.9300	12.1433	0.0176		1.1252	1.1252		1.0363	1.0363		1,804.8600	1,804.8600	0.5344		1,816.0828

3.6 Paving - 2016

Unmitigated Construction Off-Site

	ROG	NOx	CO	SO2	Fugitive PM10	Exhaust PM10	PM10 Total	Fugitive PM2.5	Exhaust PM2.5	PM2.5 Total	Bio- CO2	NBio- CO2	Total CO2	CH4	N2O	CO2e
Category	lb/day										lb/day					
Hauling	0.0000	0.0000	0.0000	0.0000	0.0000	0.0000	0.0000	0.0000	0.0000	0.0000		0.0000	0.0000	0.0000		0.0000
Vendor	0.0000	0.0000	0.0000	0.0000	0.0000	0.0000	0.0000	0.0000	0.0000	0.0000		0.0000	0.0000	0.0000		0.0000
Worker	0.0668	0.0841	1.0406	2.1800e-003	0.1677	1.5900e-003	0.1693	0.0445	1.4600e-003	0.0459		184.3532	184.3532	0.0100		184.5639
Total	0.0668	0.0841	1.0406	2.1800e-003	0.1677	1.5900e-003	0.1693	0.0445	1.4600e-003	0.0459		184.3532	184.3532	0.0100		184.5639

Mitigated Construction On-Site

	ROG	NOx	CO	SO2	Fugitive PM10	Exhaust PM10	PM10 Total	Fugitive PM2.5	Exhaust PM2.5	PM2.5 Total	Bio- CO2	NBio- CO2	Total CO2	CH4	N2O	CO2e
Category	lb/day										lb/day					
Off-Road	1.7511	17.9300	12.1433	0.0176		1.1252	1.1252		1.0363	1.0363	0.0000	1,804.8600	1,804.8600	0.5344		1,816.0828
Paving	0.1014					0.0000	0.0000		0.0000	0.0000			0.0000			0.0000
Total	1.8825	17.9300	12.1433	0.0176		1.1252	1.1252		1.0363	1.0363	0.0000	1,804.8600	1,804.8600	0.5344		1,816.0828

3.6 Paving - 2016

Mitigated Construction Off-Site

	ROG	NOx	CO	SO2	Fugitive PM10	Exhaust PM10	PM10 Total	Fugitive PM2.5	Exhaust PM2.5	PM2.5 Total	Bio- CO2	NBio- CO2	Total CO2	CH4	N2O	CO2e
Category	lb/day										lb/day					
Hauling	0.0000	0.0000	0.0000	0.0000	0.0000	0.0000	0.0000	0.0000	0.0000	0.0000		0.0000	0.0000	0.0000		0.0000
Vendor	0.0000	0.0000	0.0000	0.0000	0.0000	0.0000	0.0000	0.0000	0.0000	0.0000		0.0000	0.0000	0.0000		0.0000
Worker	0.0668	0.0841	1.0406	2.1800e-003	0.1677	1.5900e-003	0.1693	0.0445	1.4600e-003	0.0459		184.3532	184.3532	0.0100		184.5639
Total	0.0668	0.0841	1.0406	2.1800e-003	0.1677	1.5900e-003	0.1693	0.0445	1.4600e-003	0.0459		184.3532	184.3532	0.0100		184.5639

3.7 Architectural Coating - 2016

Unmitigated Construction On-Site

	ROG	NOx	CO	SO2	Fugitive PM10	Exhaust PM10	PM10 Total	Fugitive PM2.5	Exhaust PM2.5	PM2.5 Total	Bio- CO2	NBio- CO2	Total CO2	CH4	N2O	CO2e
Category	lb/day										lb/day					
Archit. Coating	43.5097					0.0000	0.0000		0.0000	0.0000			0.0000			0.0000
Off-Road	0.3685	2.3722	1.8839	2.9700e-003		0.1966	0.1966		0.1966	0.1966		281.4481	281.4481	0.0332		282.1449
Total	44.2682	2.3722	1.8839	2.9700e-003		0.1966	0.1966		0.1966	0.1966		281.4481	281.4481	0.0332		282.1449

3.7 Architectural Coating - 2016

Unmitigated Construction Off-Site

	ROG	NOx	CO	SO2	Fugitive PM10	Exhaust PM10	PM10 Total	Fugitive PM2.5	Exhaust PM2.5	PM2.5 Total	Bio- CO2	NBio- CO2	Total CO2	CH4	N2O	CO2e
Category	lb/day										lb/day					
Hauling	0.0000	0.0000	0.0000	0.0000	0.0000	0.0000	0.0000	0.0000	0.0000	0.0000		0.0000	0.0000	0.0000		0.0000
Vendor	0.0000	0.0000	0.0000	0.0000	0.0000	0.0000	0.0000	0.0000	0.0000	0.0000		0.0000	0.0000	0.0000		0.0000
Worker	0.0401	0.0505	0.6243	1.3100e-003	0.1006	9.5000e-004	0.1016	0.0267	8.7000e-004	0.0276		110.6119	110.6119	6.0200e-003		110.7384
Total	0.0401	0.0505	0.6243	1.3100e-003	0.1006	9.5000e-004	0.1016	0.0267	8.7000e-004	0.0276		110.6119	110.6119	6.0200e-003		110.7384

Mitigated Construction On-Site

	ROG	NOx	CO	SO2	Fugitive PM10	Exhaust PM10	PM10 Total	Fugitive PM2.5	Exhaust PM2.5	PM2.5 Total	Bio- CO2	NBio- CO2	Total CO2	CH4	N2O	CO2e
Category	lb/day										lb/day					
Archit. Coating	43.5097					0.0000	0.0000		0.0000	0.0000			0.0000			0.0000
Off-Road	0.3685	2.3722	1.8839	2.9700e-003		0.1966	0.1966		0.1966	0.1966	0.0000	281.4481	281.4481	0.0332		282.1449
Total	44.2682	2.3722	1.8839	2.9700e-003		0.1966	0.1966		0.1966	0.1966	0.0000	281.4481	281.4481	0.0332		282.1449

3.7 Architectural Coating - 2016

Mitigated Construction Off-Site

	ROG	NOx	CO	SO2	Fugitive PM10	Exhaust PM10	PM10 Total	Fugitive PM2.5	Exhaust PM2.5	PM2.5 Total	Bio- CO2	NBio- CO2	Total CO2	CH4	N2O	CO2e
Category	lb/day										lb/day					
Hauling	0.0000	0.0000	0.0000	0.0000	0.0000	0.0000	0.0000	0.0000	0.0000	0.0000		0.0000	0.0000	0.0000		0.0000
Vendor	0.0000	0.0000	0.0000	0.0000	0.0000	0.0000	0.0000	0.0000	0.0000	0.0000		0.0000	0.0000	0.0000		0.0000
Worker	0.0401	0.0505	0.6243	1.3100e-003	0.1006	9.5000e-004	0.1016	0.0267	8.7000e-004	0.0276		110.6119	110.6119	6.0200e-003		110.7384
Total	0.0401	0.0505	0.6243	1.3100e-003	0.1006	9.5000e-004	0.1016	0.0267	8.7000e-004	0.0276		110.6119	110.6119	6.0200e-003		110.7384

4.0 Operational Detail - Mobile

4.1 Mitigation Measures Mobile

	ROG	NOx	CO	SO2	Fugitive PM10	Exhaust PM10	PM10 Total	Fugitive PM2.5	Exhaust PM2.5	PM2.5 Total	Bio- CO2	NBio- CO2	Total CO2	CH4	N2O	CO2e
Category	lb/day										lb/day					
Mitigated	0.7261	2.3501	9.5354	0.0232	1.5344	0.0352	1.5696	0.4103	0.0324	0.4427		2,046.0167	2,046.0167	0.0837		2,047.7747
Unmitigated	0.7261	2.3501	9.5354	0.0232	1.5344	0.0352	1.5696	0.4103	0.0324	0.4427		2,046.0167	2,046.0167	0.0837		2,047.7747

4.2 Trip Summary Information

	Average Daily Trip Rate			Unmitigated	Mitigated
Land Use	Weekday	Saturday	Sunday	Annual VMT	Annual VMT
Parking Lot	0.00	0.00	0.00		
Unrefrigerated Warehouse-No Rail	85.60	85.60	85.60	368,855	368,855
Unrefrigerated Warehouse-No Rail	83.04	83.04	83.04	355,877	355,877
Total	168.64	168.64	168.64	722,733	722,733

4.3 Trip Type Information

	Miles			Trip %			Trip Purpose %		
Land Use	H-W or C-W	H-S or C-C	H-O or C-NW	H-W or C-W	H-S or C-C	H-O or C-NW	Primary	Diverted	Pass-by
Parking Lot	16.60	8.40	6.90	0.00	0.00	0.00	0	0	0
Unrefrigerated Warehouse-No	16.60	8.40	6.90	59.00	0.00	41.00	92	5	3
Unrefrigerated Warehouse-No	16.60	8.40	6.90	59.00	0.00	41.00	92	5	3

LDA	LDT1	LDT2	MDV	LHD1	LHD2	MHD	HHD	OBUS	UBUS	MCY	SBUS	MH
0.533598	0.058434	0.178244	0.125508	0.038944	0.006283	0.016425	0.031066	0.002453	0.003157	0.003691	0.000543	0.001655

	ROG	NOx	CO	SO2	Fugitive PM10	Exhaust PM10	PM10 Total	Fugitive PM2.5	Exhaust PM2.5	PM2.5 Total	Bio- CO2	NBio- CO2	Total CO2	CH4	N2O	CO2e
Category	lb/day										lb/day					
NaturalGas Mitigated	1.7500e-003	0.0159	0.0134	1.0000e-004		1.2100e-003	1.2100e-003		1.2100e-003	1.2100e-003		19.0978	19.0978	3.7000e-004	3.5000e-004	19.2141
NaturalGas Unmitigated	1.7500e-003	0.0159	0.0134	1.0000e-004		1.2100e-003	1.2100e-003		1.2100e-003	1.2100e-003		19.0978	19.0978	3.7000e-004	3.5000e-004	19.2141

5.2 Energy by Land Use - NaturalGas

Unmitigated

	NaturalGas Use	ROG	NOx	CO	SO2	Fugitive PM10	Exhaust PM10	PM10 Total	Fugitive PM2.5	Exhaust PM2.5	PM2.5 Total	Bio- CO2	NBio- CO2	Total CO2	CH4	N2O	CO2e
Land Use	kBTU/yr	lb/day										lb/day					
Parking Lot	0	0.0000	0.0000	0.0000	0.0000		0.0000	0.0000		0.0000	0.0000		0.0000	0.0000	0.0000	0.0000	0.0000
Unrefrigerated Warehouse-No Rail	79.9329	8.6000e-004	7.8400e-003	6.5800e-003	5.0000e-005		6.0000e-004	6.0000e-004		6.0000e-004	6.0000e-004		9.4039	9.4039	1.8000e-004	1.7000e-004	9.4611
Unrefrigerated Warehouse-No Rail	82.3986	8.9000e-004	8.0800e-003	6.7900e-003	5.0000e-005		6.1000e-004	6.1000e-004		6.1000e-004	6.1000e-004		9.6940	9.6940	1.9000e-004	1.8000e-004	9.7530
Total		1.7500e-003	0.0159	0.0134	1.0000e-004		1.2100e-003	1.2100e-003		1.2100e-003	1.2100e-003		19.0978	19.0978	3.7000e-004	3.5000e-004	19.2141

5.2 Energy by Land Use - NaturalGas

Mitigated

	NaturalGas Use	ROG	NOx	CO	SO2	Fugitive PM10	Exhaust PM10	PM10 Total	Fugitive PM2.5	Exhaust PM2.5	PM2.5 Total	Bio- CO2	NBio- CO2	Total CO2	CH4	N2O	CO2e
Land Use	kBTU/yr	lb/day										lb/day					
Unrefrigerated Warehouse-No Rail	0.0799329	8.6000e-004	7.8400e-003	6.5800e-003	5.0000e-005		6.0000e-004	6.0000e-004		6.0000e-004	6.0000e-004		9.4039	9.4039	1.8000e-004	1.7000e-004	9.4611
Unrefrigerated Warehouse-No Rail	0.0823986	8.9000e-004	8.0800e-003	6.7900e-003	5.0000e-005		6.1000e-004	6.1000e-004		6.1000e-004	6.1000e-004		9.6940	9.6940	1.9000e-004	1.8000e-004	9.7530
Parking Lot	0	0.0000	0.0000	0.0000	0.0000		0.0000	0.0000		0.0000	0.0000		0.0000	0.0000	0.0000	0.0000	0.0000
Total		1.7500e-003	0.0159	0.0134	1.0000e-004		1.2100e-003	1.2100e-003		1.2100e-003	1.2100e-003		19.0978	19.0978	3.7000e-004	3.5000e-004	19.2141

6.0 Area Detail

6.1 Mitigation Measures Area

	ROG	NOx	CO	SO2	Fugitive PM10	Exhaust PM10	PM10 Total	Fugitive PM2.5	Exhaust PM2.5	PM2.5 Total	Bio- CO2	NBio- CO2	Total CO2	CH4	N2O	CO2e
Category	lb/day										lb/day					
Mitigated	2.4959	1.8000e-004	0.0172	0.0000		6.0000e-005	6.0000e-005		6.0000e-005	6.0000e-005		0.0350	0.0350	1.0000e-004		0.0351
Unmitigated	2.4959	1.8000e-004	0.0172	0.0000		6.0000e-005	6.0000e-005		6.0000e-005	6.0000e-005		0.0350	0.0350	1.0000e-004		0.0351

6.2 Area by SubCategory

Unmitigated

	ROG	NOx	CO	SO2	Fugitive PM10	Exhaust PM10	PM10 Total	Fugitive PM2.5	Exhaust PM2.5	PM2.5 Total	Bio- CO2	NBio- CO2	Total CO2	CH4	N2O	CO2e
SubCategory	lb/day										lb/day					
Architectural Coating	0.4210					0.0000	0.0000		0.0000	0.0000			0.0000			0.0000
Consumer Products	2.0733					0.0000	0.0000		0.0000	0.0000			0.0000			0.0000
Landscaping	1.6800e-003	1.6000e-004	0.0172	0.0000		6.0000e-005	6.0000e-005		6.0000e-005	6.0000e-005		0.0359	0.0359	1.0000e-004		0.0361
Total	**2.4959**	**1.6000e-004**	**0.0172**	**0.0000**		**6.0000e-005**	**6.0000e-005**		**6.0000e-005**	**6.0000e-005**		**0.0359**	**0.0359**	**1.0000e-004**		**0.0361**

Mitigated

	ROG	NOx	CO	SO2	Fugitive PM10	Exhaust PM10	PM10 Total	Fugitive PM2.5	Exhaust PM2.5	PM2.5 Total	Bio- CO2	NBio- CO2	Total CO2	CH4	N2O	CO2e
SubCategory	lb/day										lb/day					
Architectural Coating	0.4210					0.0000	0.0000		0.0000	0.0000			0.0000			0.0000
Consumer Products	2.0733					0.0000	0.0000		0.0000	0.0000			0.0000			0.0000
Landscaping	1.6800e-003	1.6000e-004	0.0172	0.0000		6.0000e-005	6.0000e-005		6.0000e-005	6.0000e-005		0.0359	0.0359	1.0000e-004		0.0361
Total	**2.4959**	**1.6000e-004**	**0.0172**	**0.0000**		**6.0000e-005**	**6.0000e-005**		**6.0000e-005**	**6.0000e-005**		**0.0359**	**0.0359**	**1.0000e-004**		**0.0361**

7.0 Water Detail

7.1 Mitigation Measures Water

8.0 Waste Detail

8.1 Mitigation Measures Waste

9.0 Operational Offroad

Equipment Type	Number	Hours/Day	Days/Year	Horse Power	Load Factor	Fuel Type

10.0 Vegetation

THIS PAGE HAS BEEN INTENTIONALLY LEFT BLANK.

APPENDIX B – NO FURTHER ACTION LETTER

THIS PAGE HAS BEEN INTENTIONALLY LEFT BLANK.

COUNTY OF LOS ANGELES

FIRE DEPARTMENT

DARYL L. OSBY
FIRE CHIEF
FORESTER & FIRE WARDEN

Refer reply to
Health Hazardous Materials Division
5825 Rickenbacker Rd.
Commerce CA 90040-302

September 1, 2015

David L. Sipple, PE
Neenah Enterprises Inc.
2121 Brooks Avenue
Neenah, WI 54956

Dear Mr. Sipple:

FORMER GREGG INDUSTRIES FOUNDRY, 10460 HICKSON STREET, EL MONTE, CA 91731 (SMU FILE #11-840/RO0001354)

This Department has completed a review of the reports entitled, "Remediation Report for the Removal of Lead and TPH Impacted Soils and PCB Impacted Asphalt, Concrete, Metal, and Soils, Gregg Industries, Inc., 10460 Hickson Street, El Monte, California 91731," dated February 2015; "Soil Management and Due Diligence Report, Site Remediation, Hardscape Removal, and Rough Grading, Gregg Industries, Inc., 10460 Hickson Street, El Monte, California 91731," dated June, 2015; "Guard Shack Remediation, Gregg Industries, Inc., 10460 Hickson Street, El Monte, California 91731," dated August 2015; and, SMP 7-15 Remediation, Gregg Industries, Inc., 10460 Hickson Street, El Monte, California 91731," dated August 2015, submitted by your consultant AECOM Technical Services, Inc. (AECOM). This Department also reviewed the "Notice of Environmental Condition and Environmental Restriction, Regarding Assessors Parcel Numbers 8576-025-037, 8576-027-030 and 8576-027-031," recorded at the Los Angeles County Recorder's Office on August 28, 2015. This notice restricts the site to commercial/industrial use due to the presence of contaminants in the onsite soil and soil vapor that exceed residential environmental screening levels.

Based on information provided in the reports and with the provision that the information was accurate and representative of existing conditions, we concur with your consultant that the known site contamination has been satisfactorily mitigated for commercial/industrial site use and no further action is required at the subject site. The Site Mitigation Unit of this Department has no further requirement or restriction relating to this site at this time.

This letter, however, does not relieve you of any liability under the California Health and Safety Code, the State Water Code, or other applicable laws and regulations, nor does it relieve you of responsibility for any unidentified conditions or future operations that could pose an environmental concern.

If you have any questions, please feel free to call Richard Clark at (323) 890-4106.

Respectfully submitted,

RICHARD CLARK, SUPERVISOR
SITE MITIGATION UNIT
HEALTH HAZARDOUS MATERIALS DIVISION

RC:rc

ec: D. Koch, AECOM

THIS PAGE HAS BEEN INTENTIONALLY LEFT BLANK.

TRAFFIC IMPACT STUDY
WAREHOUSE DEVELOPMENT
10620 HICKSON STREET
EL MONTE, CALIFORNIA

♦♦♦♦♦♦♦♦♦♦♦♦♦♦♦♦♦♦♦

Prepared for

CEG Construction
7901 Crossway Drive
Pico Rivera, CA 90660-4449
Mr. James Devling

♦♦♦♦♦♦♦♦♦♦♦♦♦♦♦♦♦♦♦

Prepared by

CROWN CITY ENGINEERS, INC.

1475 Glen Oaks Boulevard
Pasadena, CA 91105
Phone: 626-795-9769

Under the Supervision of:
Patrick B. Lang, P.E

March 2016

CCE148-5/PBL

TABLE OF CONTENTS

TABLE OF CONTENTS i
PREPARER'S CERTIFICATE iii
EXECUTIVE SUMMARY 4
INTRODUCTION 6
REPORT METHODOLOGY 6
STUDY APPROACH 6
LEVEL OF SERVICE CRITERIA 7
TABLE 1 LEVEL OF SERVICE DEFINITIONS 8
TABLE 2 LEVEL OF SERVICE CRITERIA 9
EXISTING ROADWAY SYSTEM AND TRAFFIC VOLUMES 10
EXISTING CIRCULATION NETWORK 10
FIGURE 1 VICINITY MAP 12
FIGURE 2 AERIAL VIEW OF CIRCULAR NETWORK 13
EXISTING TRAFFIC VOLUMES 13
FIGURE 3 LOCATION OF STUDY INTERSECTION 14
FIGURE 4 LANE CONFIGURATION OF STUDY INTERSECTION 15
FIGURE 5 EXISTING PEAK HOUR TURNING MOVEMENT COUNTS 16
EXISTING (2015) TRAFFIC CONDITIONS 17
TABLE 3 EXISTING (2015) LEVEL OF SERVICE SUMMARY 17
OPENING YEAR (2016) PRE-PROJECT CONDITIONS 17
TABLE 4 CUMULATIVE PLANNED PROJECT TRIP GENERATION 18
TABLE 5 FUTURE (2016) PRE-PROJECT WITH CUMULATIVE PROJECTS LEVEL OF SERVICE SUMMARY 19
PROPOSED PROJECT 19
TABLE 6 TRIP GENERATION FOR A WAREHOUSE 20
FIGURE 6 SITE PLAN 21
FIGURE 7 PERCENTAGE DISTRIBUTION OF PROJECT RELATEDPASSENGERVEHICLES 22
FIGURE 8 PERCENTAGE DISTRIBUTION OF PROJECT RELATED TRUCKS 23
FIGURE 9 PROJECT TRAFFIC VOLUME IN PASSENGER CAR EQUIVALENT (PCE) 24

FUTURE (2016) PLUS PROJECT CONDITIONS 25
TABLE 7 EXISTING (2015) PLUS PROJECT LEVEL OF SERVICE SUMMARY.....25
PROJECT IMPACT AND MITIGATION MEAUSURES 26
PARKING DEMAND ANALYSIS.....26
TABLE 8 EXISTING (2015) AND FUTURE (2016) LEVEL OF SERVICE SUMMARY WITH AND WITHOUT PROJECT.....26
TABLE 9 PARKING REQUIREMENT 26
ON-SITE CIRCULATION ANALYSIS 27
TRUCK TURNING TEMPLATE ANALYSIS.....27
CONCLUSION.....28
APPENDIX A EXISTING 2015 TRAFFIC COUNTS .....A
APPENDIX B LEVEL OF SERVICE ANALYSIS SHEET ..... B
APPENDIX C TRUCK TURING TEMPLATE ANALYSIS..... C

TRAFFIC IMPACT STUDY

WAREHOUSE DEVELOPMENT

10620 HICKSON STREET

EL MONTE, CALIFORNIA

PREPARER'S CERTIFICATE

This is to certify that the above titled traffic study has been prepared under the supervision of Patrick B. Lang, P.E., a Professional Traffic Engineer, registered in the State of California.

Patrick B. Lang, P.E. Registration #: TR 875	Date	Professional Engineer's Stamp

TRAFFIC IMPACT STUDY
WAREHOUSE DEVELOPMENT
10620 HICKSON STREET
EL MONTE, CALIFORNIA

EXECUTIVE SUMMARY

The purpose of this traffic impact analysis is to evaluate the impacts on traffic circulation system with the proposed Warehouse Development consisting of approximately 67,111 square feet of warehouse and ancillary office space. The development will be located at 10620 Hickson Street (the southwest end of the cul-de-sac) within the City of El Monte, California.

Study objectives include: 1) documentation of existing 2015 traffic conditions in the vicinity of the site, 2) determination of Project Opening Year (2016) traffic conditions and level of service (LOS) without and with the project, 3) determination of project related impacts to the circulation system, 4) determine if truck movement at Hickson Street is feasible and 5) identification of mitigation measures to reduce significant impacts, if any, to a level of insignificance. The study included evaluation of the following five (5) key intersections in the general vicinity of the site.

- Baldwin Avenue and Valley Boulevard
- Arden Drive and Lower Azusa Road
- Arden Drive and Hickson Street
- Arden Drive and Valley Boulevard
- Santa Anita Avenue and Valley Boulevard

The Hickson Street Warehouse project is estimated to generate a net total of approximately 239 new two-way trips per day (120 inbound and 119 outbound), with 20 trips during the AM peak hour (16 inbound and 4 outbound), and 21 trips during the PM peak hour (5 inbound and 16 outbound). These trips are expressed in terms of passenger car equivalents (PCE) of associated truck trips using a PCE of 2.5 for each truck trip. The analysis was based on City guidelines and conversations with the City of El Monte staff.

In summary, based on the results of this traffic impact analysis, the proposed Hickson Street warehouse project will not have any significant adverse impacts on level of service (LOS) at any of the key five intersections analyzed within the surrounding roadway system.
A review of Congestion Management Program (CMP) guidelines was also conducted. Since the project will not add 50 or more trips to any CMP arterial monitoring intersection during either the AM or PM weekday peak hours, no CMP arterial

monitoring intersection was analyzed in this TIA. The project will not add 150 or more trips on the freeway mainline traffic volume in any direction during the AM or the PM weekday peak hours. Therefore, no freeway monitoring location was required to be analyzed per CMP guidelines.

The projects parking demand and the number of parking spaces provided for parking have also been analyzed using the City's parking code, and found to adequately meet the requirements for parking. On-site circulation and truck docking have also been analyzed and found to meet the project's needs.

At the Arden Drive and Hickson Street intersection red curb should be installed on both the north and south sides of Hickson Street for northbound trucks to make a right-turn, and on the east side of Arden Drive for westbound trucks to make a right-turn.

TRAFFIC IMPACT STUDY
WAREHOUSE DEVEOPMENT
10620 HICKSON AVENUE
EL MONTE, CALIFORNIA

INTRODUCTION

The purpose of this traffic impact analysis is to evaluate the impacts on traffic circulation system due to the proposed Hickson Avenue Warehouse Development at 10620 Hickson Avenue, El Monte, California. The project site is located on the southwest corner of the cul-de-sac of Hickson Avenue.

The following are the key objectives identified for this study:

- Documentation of existing traffic conditions in the vicinity of the proposed development
- Determination of project opening year (2016) traffic conditions and level of service (LOS) without, and with the proposed project
- Determination of adequacy of on-site parking and circulation
- Determine project related impacts and mitigation measures if necessary

The report provides data regarding existing operational characteristics of traffic in the general vicinity of the project, as well as an analysis of the proposed project's impacts to these existing and anticipated traffic conditions. The report identifies and quantifies the impact (if any) at the five key intersections and addresses the most appropriate and reasonable mitigation strategies at any impacted intersections, which are identified to be operating at a deficient level of service.

This report investigates existing and anticipated future opening year (2016) traffic operating conditions. The adequacy of parking spaces to be provided is also assessed.

REPORT METHODOLOGY

STUDY APPROACH

This report approaches the task of identifying and quantifying the anticipated impacts to the circulation system with a structured, "building block" methodology. The first step is

to inventory and quantify existing conditions. Upon this foundation of fact, a travel forecast model is structured for the entire project area and calibrated to produce reliable output, verifiable with the existing data. With the project traffic calculated and distributed onto the study area, at the anticipated opening year of the project in 2016, the travel forecast model is utilized to assess the project traffic impacts at that time. The model utilizes a growth factor for traffic based upon regional guidelines, as well as the traffic anticipated to be introduced from the proposed project to produce the travel forecast and level-of-service data for the future target year.

The trip generation estimate is based on the 9th edition of Institute of Transportation Engineers (ITE)'s "Trip Generation" Handbook. Research and interviews have been conducted with City of El Monte staff in order to identify and characterize the most probable trip distribution patterns within the study area.

Project impacts are identified for the future year 2016 conditions. At those intersections operating deficiently (e.g., at a level worse than LOS D) and significantly impacted by the proposed project, a mitigation measure is identified and applied, and a before-and-after mitigation analysis conducted.

LEVEL OF SERVICE CRITERIA

Roadway operations and the relationship between capacity and traffic volumes are generally expressed in terms of levels of service (LOS). Levels of service are defined as LOS A through F. These levels recognize that, while an absolute limit exists as to the amount of traffic traveling through a given intersection (the absolute capacity), the conditions that motorists experience deteriorate rapidly as traffic approaches the absolute capacity. Under such conditions, congestion is experienced. There is generally instability in the traffic flow, which means that relatively small incidents (e.g., momentary engine stall) can cause considerable fluctuations in speeds and delays. This near-capacity situation is labeled LOS E. Beyond LOS E, capacity is exceeded, and arriving traffic will exceed the ability of the intersection to accommodate it. An upstream queue will form and continue to expand in length until the demand volume reduces.

A complete description of the meaning of level of service can be found in the Highway Research Board's Special Report 209 titled *Highway Capacity Manual*. The manual establishes the definitions for levels of service A through F. Brief descriptions of the six levels of service, as extracted from the manual, are listed in Table 1. The thresholds of level of service for signalized and unsignalized intersections are shown in Table 2

TABLE 1
LEVEL OF SERVICE DEFINITIONS

LOS	Description
A	No approach phase is fully utilized by traffic and no vehicle waits longer than one red indication. Typically, the approach appears quite open, turns are made easily and nearly all drivers find freedom of operation.
B	This service level represents stable operation, where an occasional approach phase is fully utilized and a substantial number are approaching full use. Many drivers begin to feel restricted within platoons of vehicles.
C	This level still represents stable operating conditions. Occasionally, drivers have to wait through more than one red signal indication, and backups may develop behind turning vehicles. Most drivers feel somewhat restricted.
D	This level encompasses a zone of increasing restriction approaching instability at the intersection. Delays to approaching vehicles may be substantial during short peaks within the peak period; however, enough cycles with lower demand occur to permit periodic clearance of developing queues, thus preventing excessive backups.
E	Capacity occurs at the upper end of this service level. It represents the most vehicles that any particular intersection can accommodate. Full utilization of every signal cycle is seldom attained no matter how great the demand.
F	This level describes forced flow operations at low speeds, where volumes exceed capacity. These conditions usually result from queues of vehicles backing up from restriction downstream. Speeds are reduced substantially and stoppages may occur for short or long periods of time due to congestion. In the extreme case, both speed and volume can drop to zero.

TABLE 2
LEVEL OF SERVICE CRITERIA

Level of Service	Signalized Intersection Volume to Capacity (V/C) Ratio	Unsignalized Intersection Control Delay (sec/veh)
A	≤ 0.60	≤ 10
B	> 0.60 – 0.70	> 10 – 15
C	> 0.70 – 0.80	> 15 – 25
D	> 0.80 – 0.90	> 25 – 35
E	> 0.90 – 1.00	> 35 – 50
F	> 1.00	> 50

According to the City's General Plan (June 2011), LOS D is the minimum threshold at all key intersections in an urban area. The City's traffic study policies and procedures require that traffic mitigation measures be identified to provide for operations at the minimum threshold levels except that LOS E may occur in the following circumstances:

- Intersections/roadways at, or adjacent to, freeway ramps;
- Intersections/roadways on major corridors and transit routes;
- Intersections/roadways on truck routes; or
- Intersections/roadways in or adjacent to commercial districts

The above standards may require, but are not intended to mandate, roadway and/or intersection widening. They are a policy goal and shall be used to monitor traffic conditions to assess the impacts of new development. Since LOS standards apply only to vehicles and do not account for walkability or other modes, they shall not be the sole criteria for judging transportation system performance.

For the signalized study intersections, the Intersection Capacity Utilization (ICU) method has been utilized to determine intersection levels of service. For all signalized intersections, a capacity volume of 1,600 vehicles per hour per lane (2,880 vehicles per hour per dual left turn lanes) was used. Levels of service are presented for the entire intersection, consistent with the local and regional agency policies.

Feasible mitigation measures were identified to a level of insignificance to mitigate the project and cumulative projects' significant impacts. Significant impacts by project were determined based on the following:

THRESHOLD OF SIGNIFICANT IMPACT	
Pre-project LOS V/C	Project V/C Ratio Increase
C = 0.71 to 0.80	0.04 or more
D= 0.81 to 0.90	0.02 or more
E/F= 0.91 or more	0.01 or more

For the unsignalized study intersections, the Highway Capacity Manual (HCM) method has been utilized to determine intersection levels of service. The computer program Synchro 8 was utilized to compute the unsignalized intersection Level of Service (LOS) for this analysis. Synchro assigns control delay per vehicle for unsignalized intersections and assigns LOS based on the values shown in Table 2.

While the level of service concept and analysis methodology provides an indication of the performance of the entire intersection, the single letter grade A through F cannot describe specific operational deficiencies at intersections. Progression, queue formation, and left-turn storage are examples of the operational issues that affect the performance of an intersection, but do not factor into the strict calculation of level of service.

EXISTING ROADWAY SYSTEM AND TRAFFIC VOLUMES

EXISTING CIRCULATION NETWORK

In order to assess future operating conditions both with and without the proposed project, existing traffic conditions within the study area were evaluated. Figure 1, Vicinity Map, illustrates the existing circulation network within the study area as well as the location of the proposed project. Figure 2 shows an aerial view of the circulation network. The project would provide vehicular access to the parking and truck loading via a driveway located on the west side at the cul-de-sac of Hickson Street.

The following paragraphs provide a brief description of the existing roadways which comprise the circulation network of the study area, providing the majority of both regional and local access to the project.

HICKSON STREET. Hickson Street is an east-west local street in the vicinity of the project and striped with one (1) travel lane in each direction. The street has a prima facie speed of 25 miles per hour. Parking is permitted along both curb lines. Hickson Street is stop controlled at Arden Drive. Hickson Street is a cul-de-sac east of the proposed wharehouse project.

ARDEN DRIVE. Arden Drive is a north-south minor arterial street and striped with two (2) travel lanes in each direction in the vicinity of the Hickson Street. The street is

posted with a speed limit of 35 miles per hour. The intersection with Lower Azusa Road is signalized and striped with one (1) left-turn lane and one (1) and one combination through-right lane in both northbound and southbound approaches. The intersection with Valley Boulevard is signalized and striped with one (1) travel lane for left, through and right on northbound approach, and while one (1) dedicated left-turn, one (1) left and through lane, and one (1) dedicated right-turn lane on southbound approach. The intersection with Hickson Street is uncontrolled and striped with two (2) through lanes in both northbound and southbound approaches. Parking is partially permitted along both sides of the street.

BALDWIN AVENUE. Baldwin Avenue is a north-south minor arterial street and striped with two (2) travel lanes in each direction. Directional travel is separated by two-way left-turn lane. The street has a posted speed limit of 35 miles per hour. The intersection at Valley Boulevard is a signalized intersection and striped with one (1) dedicated left-turn lane, two (2) through-lanes and one (1) dedicated right-turn lanes. The southbound approach is striped with (1) dedicated left-turn lane, (1) through and (1) combination through-right-turn lane. Parking is permitted along both curb lines.

VALLEY BOULEVARD. Valley Boulevard is an east-west other principal arterial street and a truck route within the City. The intersections of Baldwin Avenue and Arden Drive are signalized and striped with one (1) dedicated left-turn lane, one (1) through lane and One (1) combination through and right-turn-lane on both the east and westbound approaches. The roadway is posted with 35 miles per hour signs. Parking is partially restricted along both sides of the street.

SANTA ANITA AVENUE. Santa Anita Avenue is a north-south other principal arterial street and a truck route within the City. The intersection with Valley Boulevard is signalized and striped with two (2) dedicated left-turn lanes three (3) through lanes and 0ne (1) dedicated right turn lane in the northbound approach. The southbound approach is striped with one (1) dedicated left-turn lanes two (2) through lanes and one (1) combination through and right turn lane. Parking is not permitted on both sides of the street in the vicinity of the Valley Boulevard intersection. The posted speed limit is 35 miles per hour.

LOWER AZUSA ROAD. Lower Azusa Road is an east-west minor arterial street and a truck route within the City. The intersection with Arden Drive is signalized and striped with one (1) dedicated left-turn lane, one (1) through lane and one (1) combination through and right turn lane in both the east and westbound approaches. Parking is permitted on both sides of the street. The Posted speed limit is 35 miles per hour.

FIGURE 1
VICINITY MAP

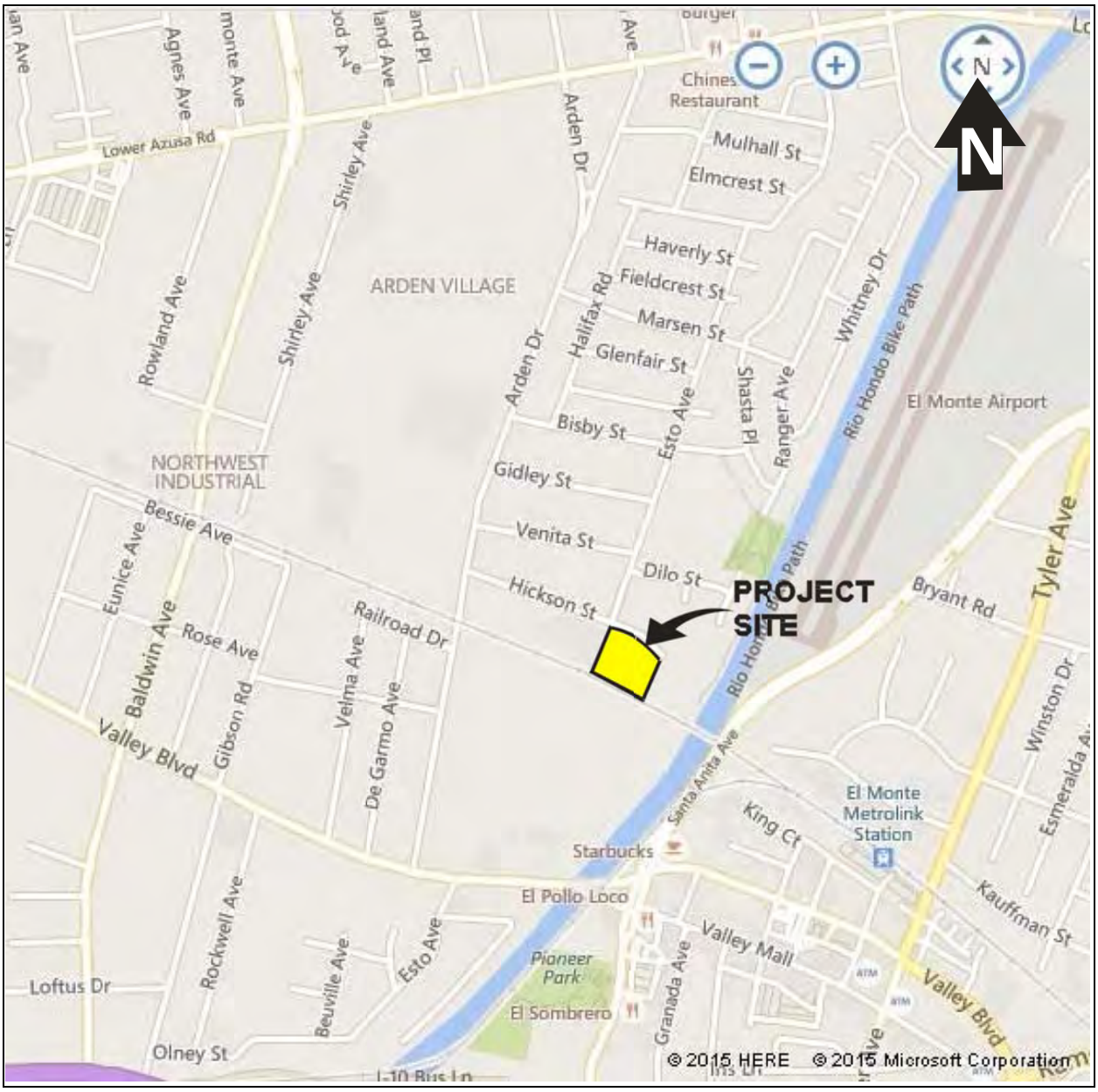

FIGURE 2
AERIAL VIEW OF CIRCULAR NETWORK

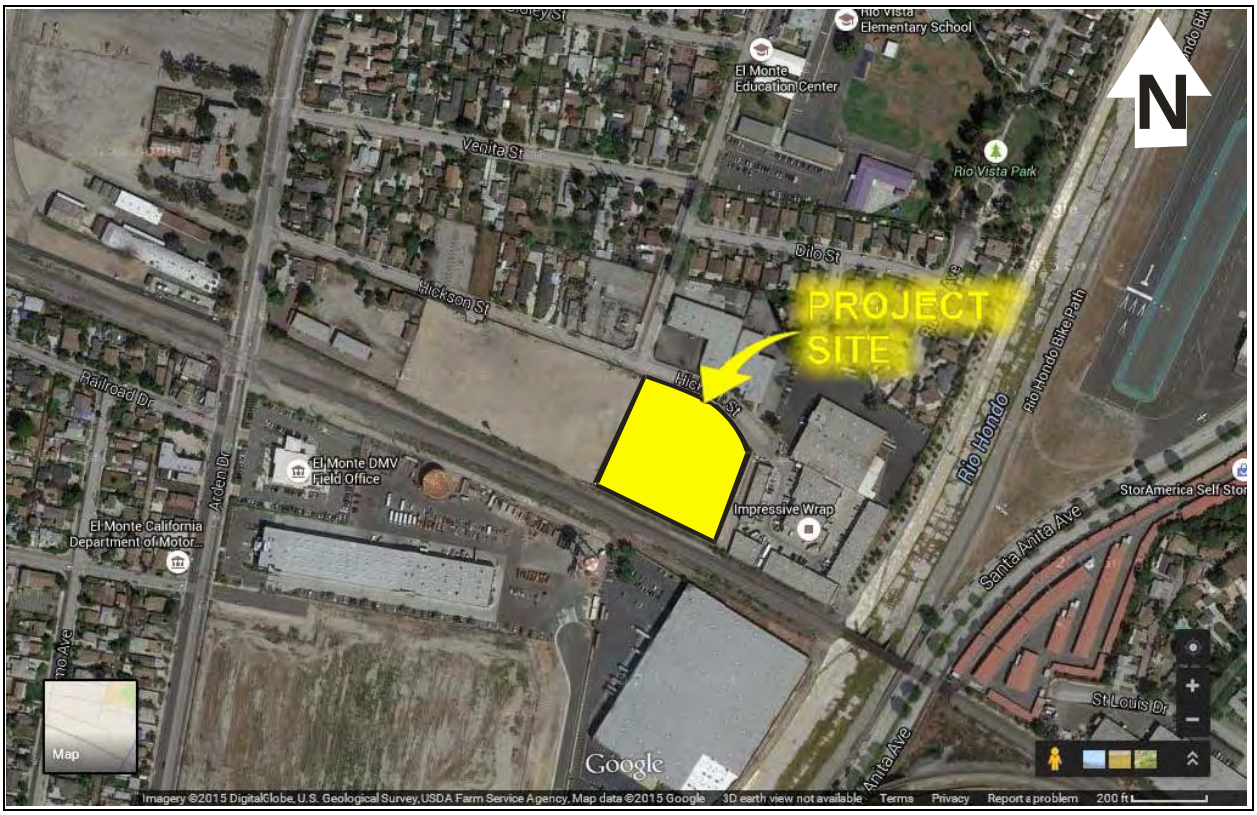

EXISTING TRAFFIC VOLUMES

For the purpose of evaluating existing operating conditions as well as future operating conditions with and without the proposed project, the study area was carefully selected in accordance with local traffic study guidelines and consultation with City staff. Manual turning movement counts for the selected intersections were collected in the during the morning and evening peak periods during the month of July, 2015. The peak hours for the counts were 7:00 to 9:00 AM and 4:00 to 6:00 PM. It was determined that the following five (5) key intersections would be analyzed in the study:

- Baldwin Avenue and Valley Boulevard
- Arden Drive and Lower Azusa Road
- Arden Drive and Hickson Street
- Arden Drive and Valley Boulevard
- Santa Anita Avenue and Valley Boulevard

Existing traffic counts were taken in July 2015. Therefore, school related traffic was not included. To account for missing school traffic, the 2015 existing 2015 volumes were increased by 2% (industry standard use) as shown in the Level of Service Analysis Sheet in Appendix B. The 2% factor used is typically used when analysis are conducted when schools are not in session. To satisfy the City's concern a new AM

count was taken on 10/22/2015. The results show the increase to be very near the stated 2%. The percentage could be higher at the intersection on Lower Azusa and Arden (adjacent to Gidley School). However, the project related traffic will not create an adverse impact.

The locations of study intersections are shown in Figure 3. Existing lane configurations at the study intersections are shown in Figure 4. Existing turning movement counts for AM and PM peak hour conditions are shown in Figure 5. Detailed turning movement counts are included in the Technical Appendix of this report.

FIGURE 3
LOCATION OF STUDY INTERSECTION

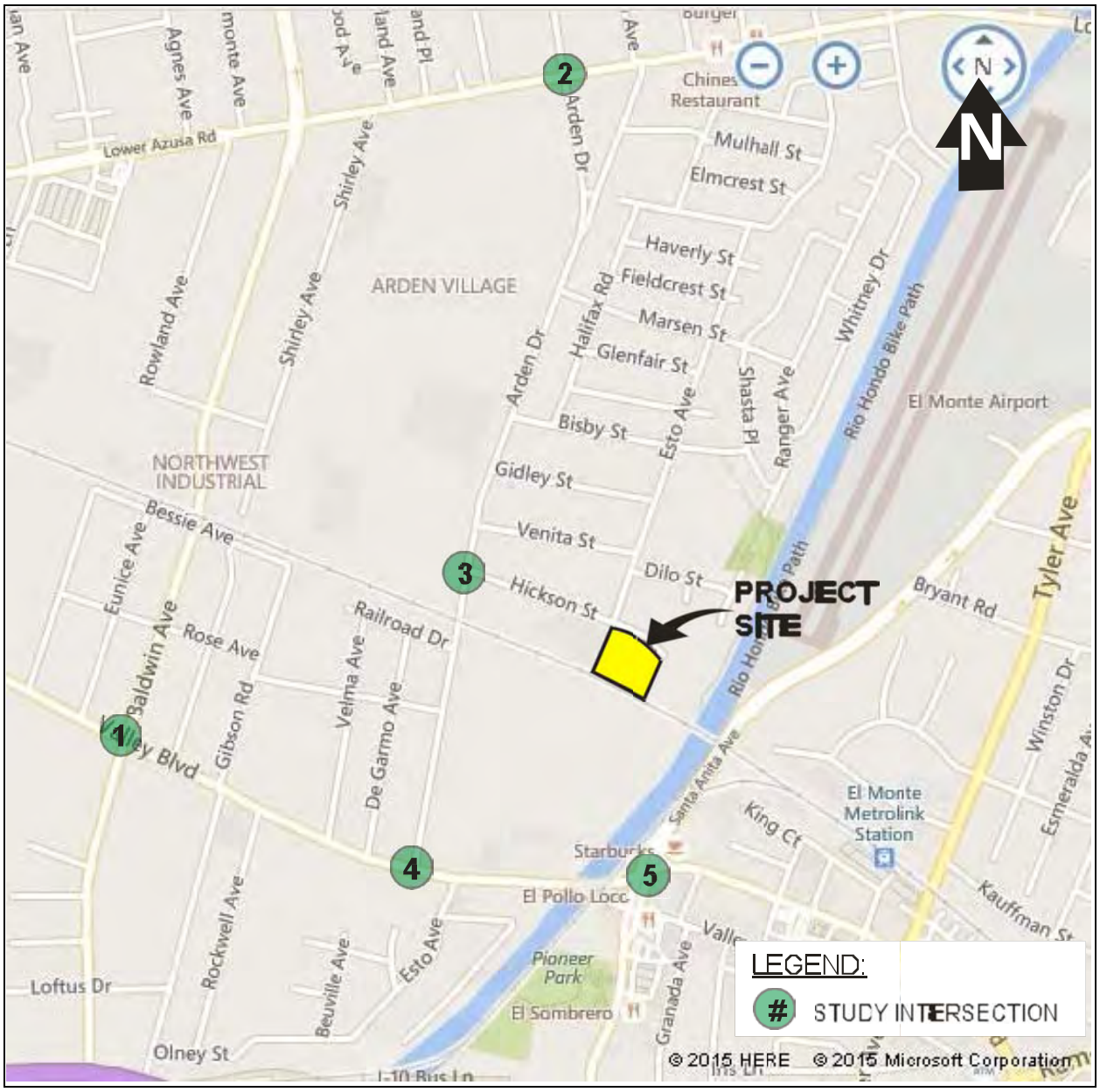

FIGURE 4
LANE CONFIGURATION OF STUDY INTERSECTION

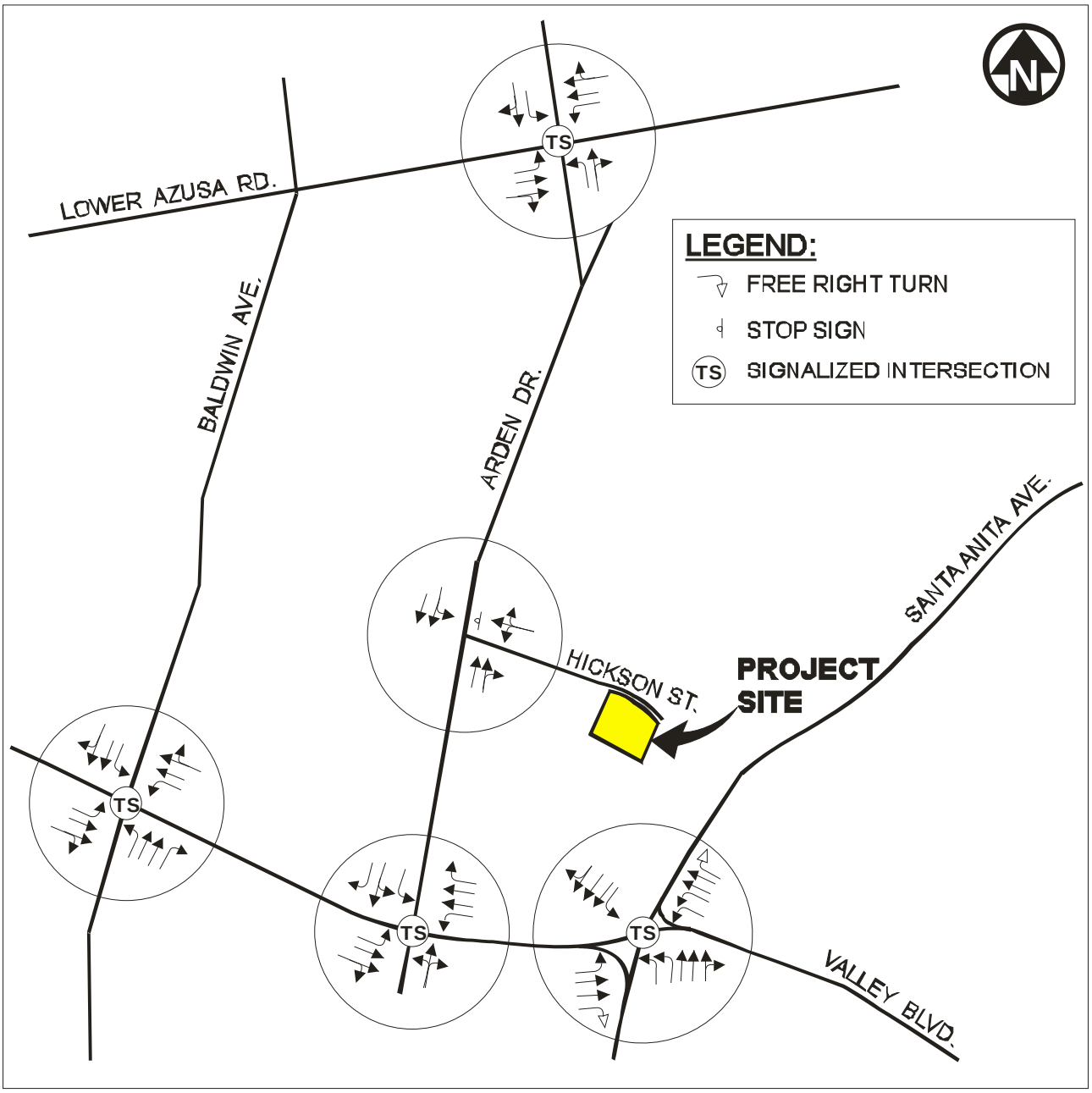

FIGURE 5
EXISTING PEAK HOUR TURNING MOVEMENT COUNTS

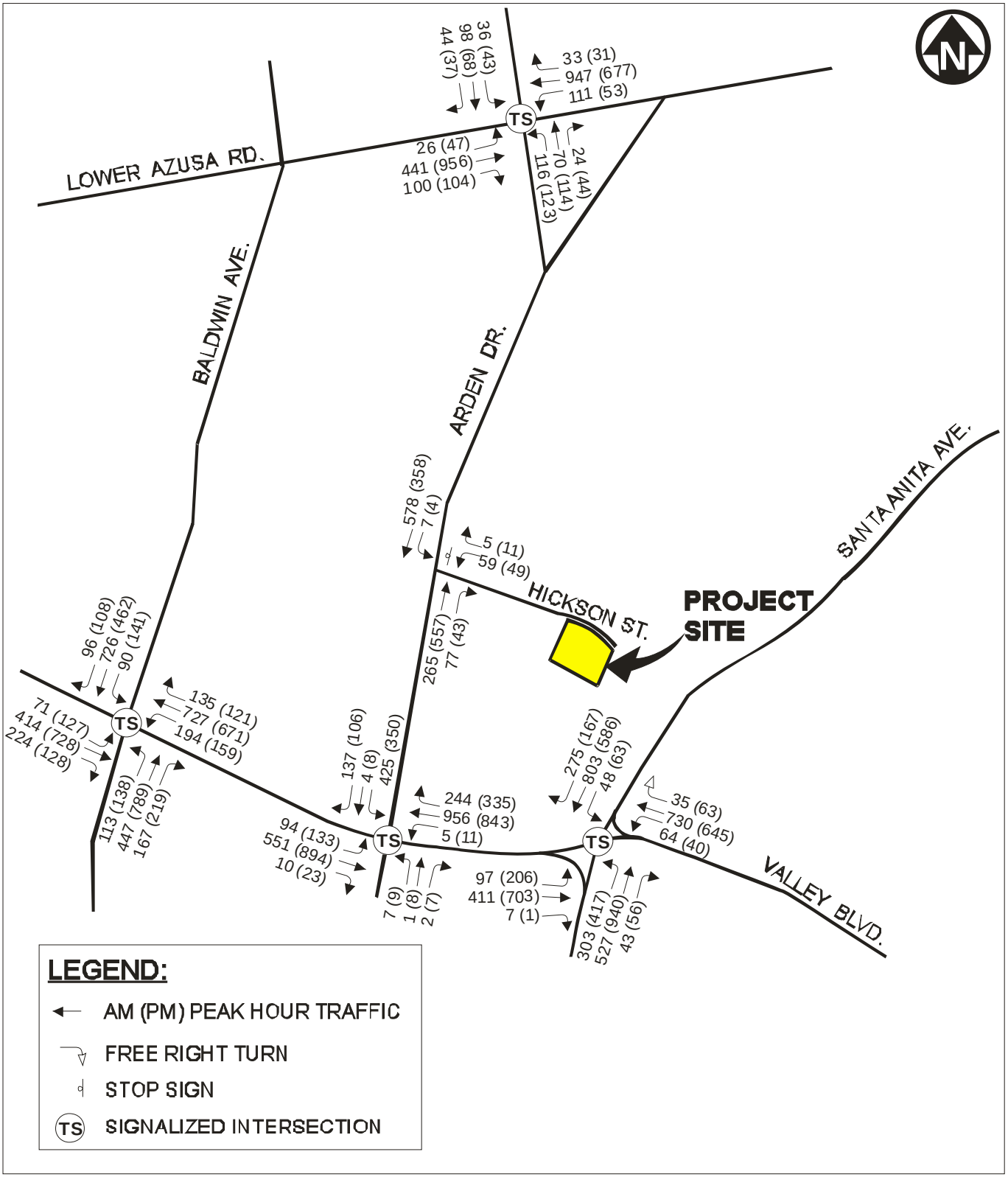

EXISTING (2015) TRAFFIC CONDITIONS

Year 2015 existing traffic conditions were evaluated using the Intersection Capacity Utilization (ICU) method for signalized intersections and Highway Capacity Manual (HCM) method for unsignalized intersections. Table 3 presents the existing condition intersection level of service analysis summary. Detailed calculations relating to the study intersections are included in the Technical Appendix of this report.

As shown in the Table 3 the study intersections are currently operating at a Level of Service (LOS) D or better during both the AM and PM peak hours.

TABLE 3
EXISTING (2015) LEVEL OF SERVICE SUMMARY

Intersection	Control Type	Peak Hour	Existing 2015 Conditions	
			LOS	V/C Ratio or [Delay]
1. Baldwin Avenue & Valley Boulevard	Signal	AM PM	C	0.761 0.816
2. Arden Drive & Lower Azusa Road	Signal	AM PM	A	0.593 0.617
3. Arden Drive & Hickson Street	Unsignal	AM PM	C	[15.9] [18.6]
4. Arden Drive & Valley Boulevard	Signal	AM PM	B	0.626 0.596
5. Santa Anita Avenue & Valley Boulevard	Signal	AM PM	C	0.734 0.749

OPENING YEAR (2016) PRE-PROJECT CONDITIONS

A 1.5 percent per year ambient traffic growth rate was applied to existing traffic volumes to create a 2016 base condition (i.e., a factor of 1.015 was applied to 2015 volumes to obtain 2016 base traffic volumes). This ambient traffic growth rate accounts for the population growth and any other unknown traffic generators within the study area.

There are five (5) cumulative projects in the vicinity of this proposed warehouse project. Future 2016 cumulative traffic conditions were evaluated as shown in Table 4.

TABLE 4
CUMULATIVE PLANNED PROJECT TRIP GENERATION

Cumulative Project	ITE Code	Size & Unit	Average Traffic Volume					
			AM Peak Hour			PM Peak Hour		
			IN	OUT	TOTAL	IN	OUT	TOTAL
WAL-MART (east of Arden Dr. north of Valley Blvd.)	813	182.5 TSF WAL-MART	189	149	338	389	405	794
		Pass-by: 18% AM; 28% PM	(34)	(27)	(61)	(109)	(113)	(222)
		Net Total Trips of WAL-MART	***155***	***122***	***277***	***280***	***292***	***572***
3527 Santa Anita Ave.	411	16.5 Acre Park	6	5	11	11	11	22
	565	20 TSF Day Care/Preschool	114	92	205	93	115	208
	232	1203 DU Condominium	42	230	272	165	82	247
	820	262.14 TSF Retail	112	70	182	334	329	663
		Pass-By Reduction	(22)	(14)	(36)	(67)	(66)	(133)
	933	11.7 TSF Restaurant (Counter Service)	249	160	408	107	89	196
		Pass-By Reduction	(50)	(32)	(82)	(21)	(18)	(39)
	932	153.9 TSF (Table Service)	745	663	1408	702	391	1093
		Pass-By Reduction	(149)	(133)	(282)	(140)	(78)	(219)
	220	647 DU Apartment	35	184	219	152	66	218
	310	200 Room Hotel	47	39	86	47	33	81
	710	41.5 TSF Conference Center	47	6	53	8	42	50
	710	500 TSF Office	570	71	641	96	508	603
	445	80 TSF Theatre	0	0	0	127	68	194
		Net Total Trips of 3527 Santa Anita Ave	***1,745***	***1,341***	***3,086***	***1,613***	***1,572***	***3,185***
Santa Fe Trail Plaza (East of Santa Anita Ave. north of Valley Blvd.)	820	107.024 TSF Shopping Center	64	39	103	191	207	398
	444	33.750 TSF Movie Theatre with Matinee to be removed	0	0	0	(505)	(397)	(902)
	820	3.951 TSF Shopping Center to be removed	(2)	(1)	(3)	(7)	(8)	(15)
		Net Total Trips of Santa Fe Trail Plaza	***62***	***38***	***100***	***(321)***	***(198)***	***(519)***
4212 Temple City Blvd.	110	398.929 TSF General Light Industrial	415	56	470	62	436	498
	814	63.044 TSF Variety Store	0	0	0	75	96	171
	820	40.413 TSF Retail	25	16	41	74	77	151
		Pass-By Reduction of 34% in PM Peak Hour	0	0	0	(25)	(26)	(51)
		Net Total Trips of 4213 Temple City Blvd (in PCE)	***440***	***72***	***511***	***186***	***583***	***769***
Hilton Hotel 9920 Valley Blvd.	310	133 Room Hotel	41	29	70	41	39	80
	931	4 KSF Restaurant	2	1	3	20	10	30
		Internal Capture (50%)	(1)	(1)	(2)	(10)	(5)	(15)
	931	4.6 KSF Shopping Center	2	2	4	23	11	34
		Internal Capture (50%)	(1)	(1)	(2)	(12)	(5)	(17)
		Net Total Trips of Hilton Hotel	***43***	***30***	***73***	***62***	***50***	***112***
Grand Total of Trip Generation			**2,005**	**1,531**	**3,536**	**1,634**	**1,716**	**3,350**

This pre-project traffic condition with the above cumulative projects was evaluated using the Intersection Capacity Utilization (ICU) method for signalized intersections and Highway Capacity Manual (HCM) method for unsignalized intersections. Detailed calculations for the study intersections are included in the Technical Appendix of this report. The LOS and V/C ratios for the study intersections under 2016 pre-project conditions with cumulative projects (without project) are shown in Table 5.

TABLE 5
FUTURE (2016) PRE-PROJECT WITH CUMULATIVE PROJECTS LEVEL OF SERVICE SUMMARY

Intersection	Control Type	Peak Hour	Future 2016 Pre-Project Conditions	
			LOS	V/C Ratio or [Delay]
1. Baldwin Avenue & Valley Boulevard	Signal	AM PM	D E	0.869 0.948
2. Arden Drive & Lower Azusa Road	Signal	AM PM	B B	0.613 0.659
3. Arden Drive & Hickson Street	Unsignal	AM PM	C C	[16.1] [19.0]
4. Arden Drive & Valley Boulevard	Signal	AM PM	B C	0.680 0.710
5. Santa Anita Avenue & Valley Boulevard	Signal	AM PM	D E	0.899 0.934

As shown in Table 5, the Baldwin Avenue and Valley Boulevard and the Santa Anita Avenue and Valley Boulevard intersections are expected to be operating at a Level of Service (LOS) D and E during the AM and PM peak hours, respectively. The rest of the study intersections are expected to operate at LOS D or better during both the AM and PM peak hours.

PROPOSED PROJECT

PROJECT DESCRIPTION

The proposed warehouse development is for a business park development within 2.85-acre site located. The proposed project consists of two concrete tilt-up industrial buildings that would provide a total floor area of 67,111 square feet with seven (7) loading docks. Building 1 will have 35,050 square feet including 28,700 square feet of warehouse, 6,350 square feet of office, and three (3) loading docks. Building 2 will have a total floor area of 32,061 square feet including 25,711 square feet of warehouse, 6,350 square feet of office, and four (4) loading docks. Figure 6 shows the proposed site plan for the project.

PROJECT TRIP GENERATION

In order to accurately assess future traffic conditions with the proposed project, trip generation estimates were developed for the project. Trip generation rates are based on nationally recognized recommendations contained in “Trip Generation” handbook, 9th edition, published by the Institute of Transportation Engineers (ITE). Table 6 shows

a summary of trip generation estimates for the project. Since the project would involve truck trips, an estimate of truck trips was calculated using the rates provided in the regionally accepted publication, “Truck Trip Generation Study,” published by the City of Fontana in August 2003 for use in traffic studies involving truck trips. The truck trips were converted into equivalent passenger car trips using a passenger car equivalence factor of 2.5.

TABLE 6
TRIP GENERATION FOR A WAREHOUSE

ITE Code	Size & Unit	Trip Generation Rate							Average Traffic Volume						
		Daily Total	AM Peak Hour			PM Peak Hour			Daily Total	AM Peak Hour			PM Peak Hour		
			%IN	%OUT	TOTAL	%IN	%OUT	TOTAL		IN	OUT	TOTAL	IN	OUT	TOTAL
TOTAL VEHICLE TRIP GENERATION															
150	67,111 GSF	3.56	79%	21%	0.3	25%	75%	0.32	239	16	4	20	5	16	21
[Ref: Institute of Transportation Engineers (ITE)’s “Trip Generation” Handbook, 9th Edition, 2012]															
TOTAL VEHICLE TRIP GENERATION IN PASSENGER CAR EQUIVALENTS (PCE) OF 2.5 WITH TRUCK TRIPS OF 20%									311	21	5	26	7	21	28

TRIP DISTRIBUTION AND ASSIGNMENT

Arrival and departure distribution patterns for project-generated traffic were estimated based upon a review of circulation patterns within the study area network and regional traffic generation and attraction characteristics.

Figures 7 and 8 depict the regional trip distribution percentages of passenger vehicles and trucks to and from the site, respectively. Figure 9 presents the project traffic volume in passenger car equivalent (PCE).

FIGURE 6
SITE PLAN

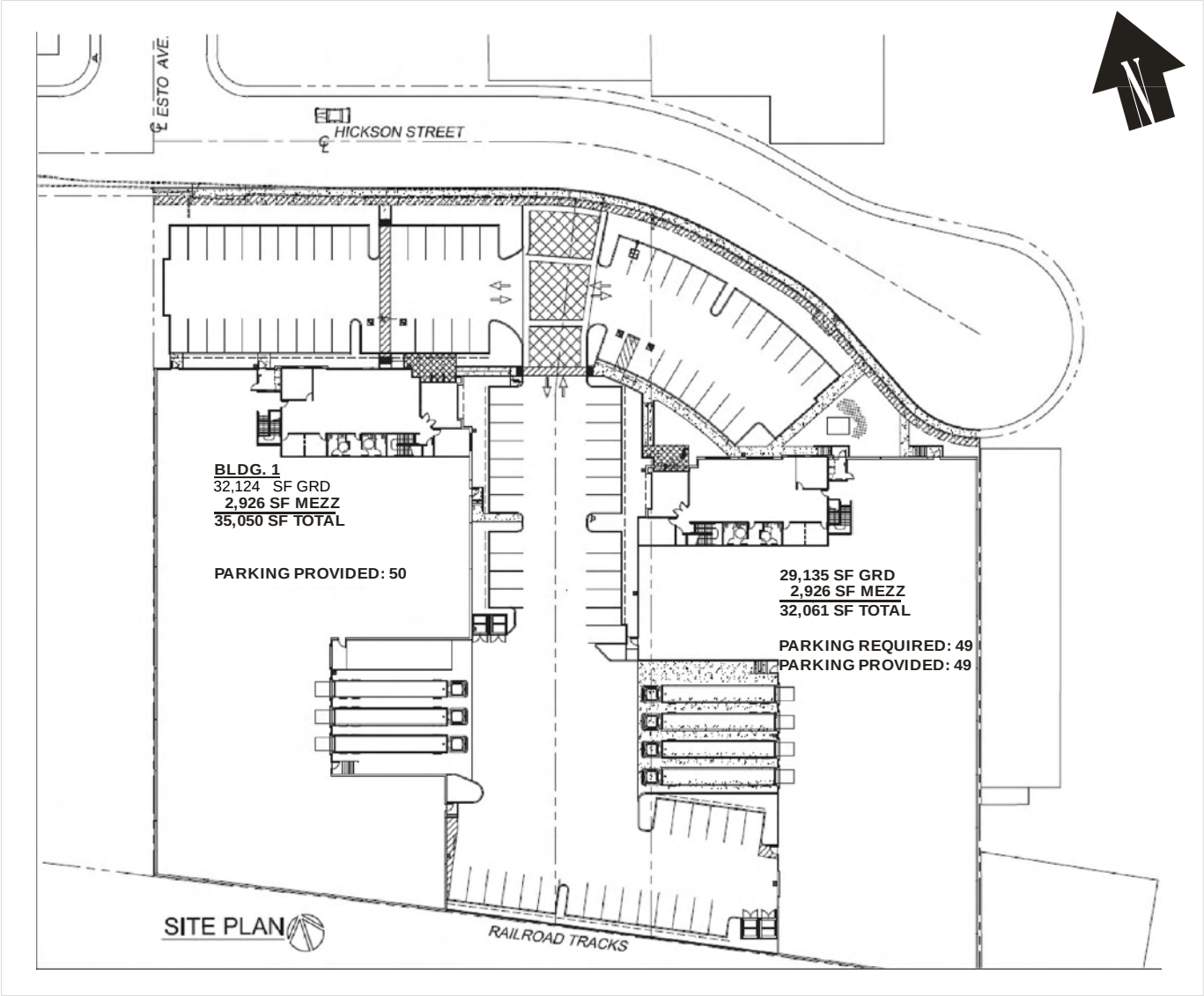

FIGURE 7
PERCENTAGE DISTRIBUTION OF PROJECT RELATED PASSENGER VEHICLES

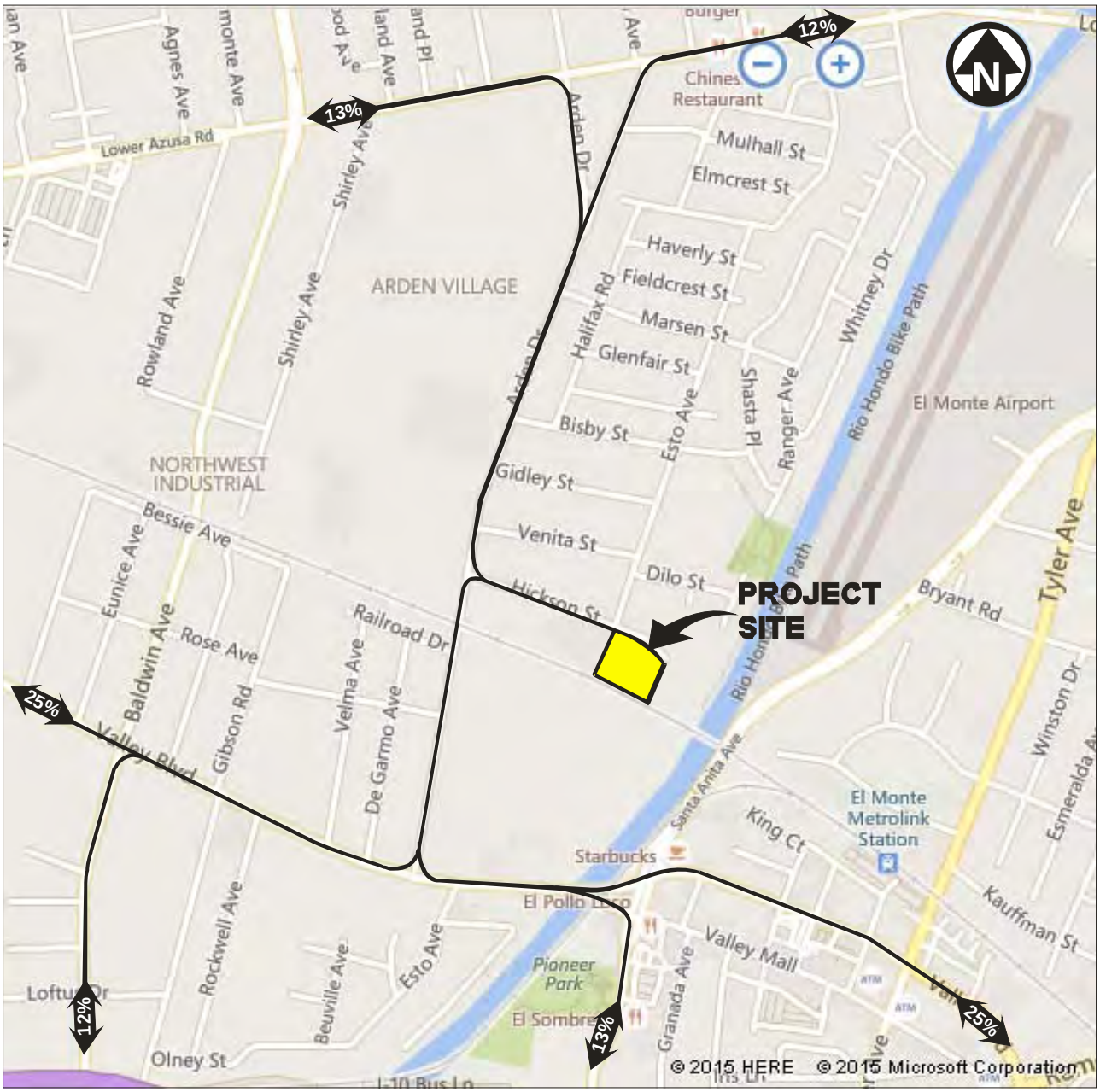

FIGURE 8
PERCENTAGE DISTRIBUTION OF PROJECT RELATED TRUCKS

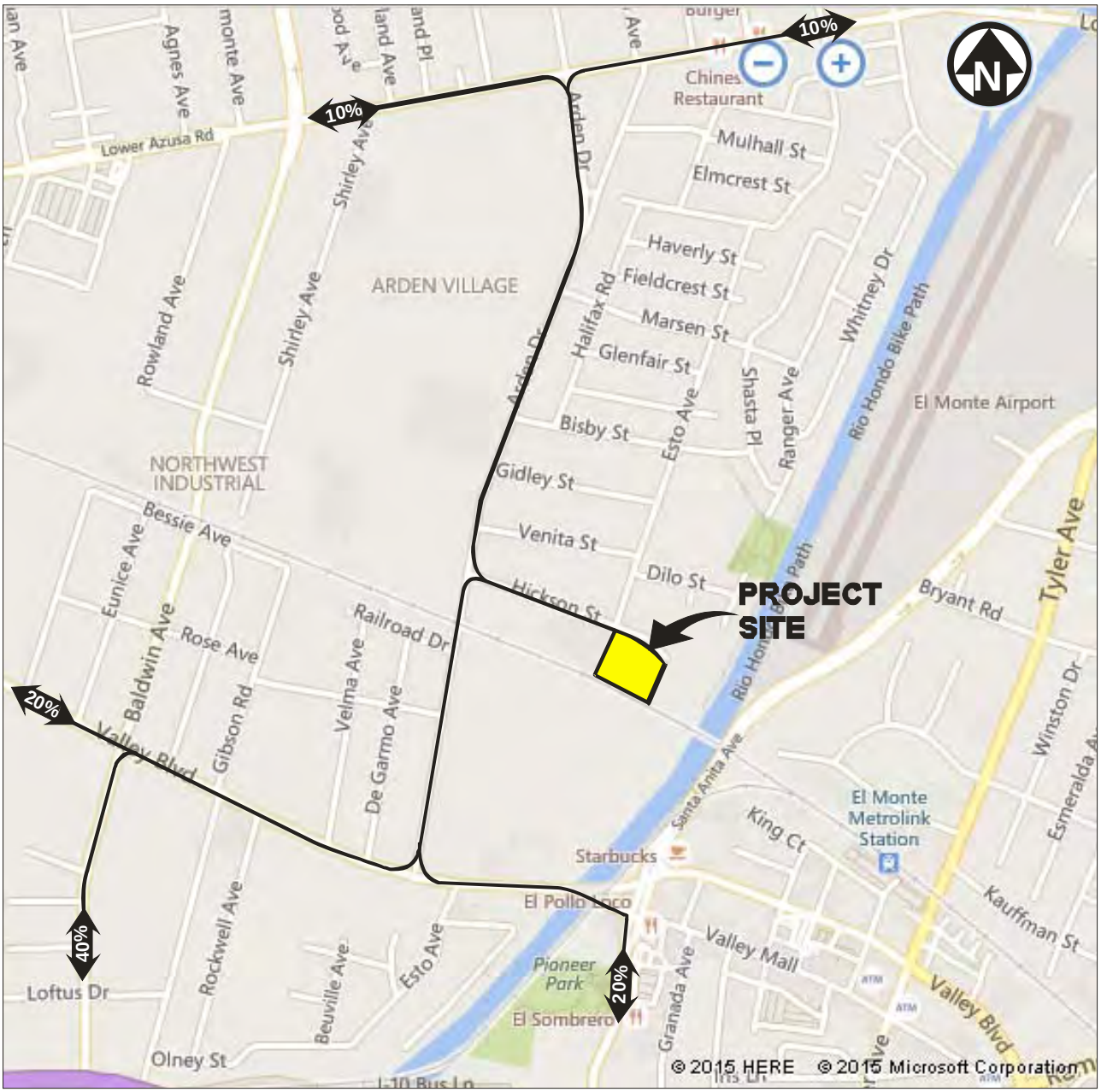

FIGURE 9
PROJECT TRAFFIC VOLUME IN PASSENGER CAR EQUIVALENT (PCE)

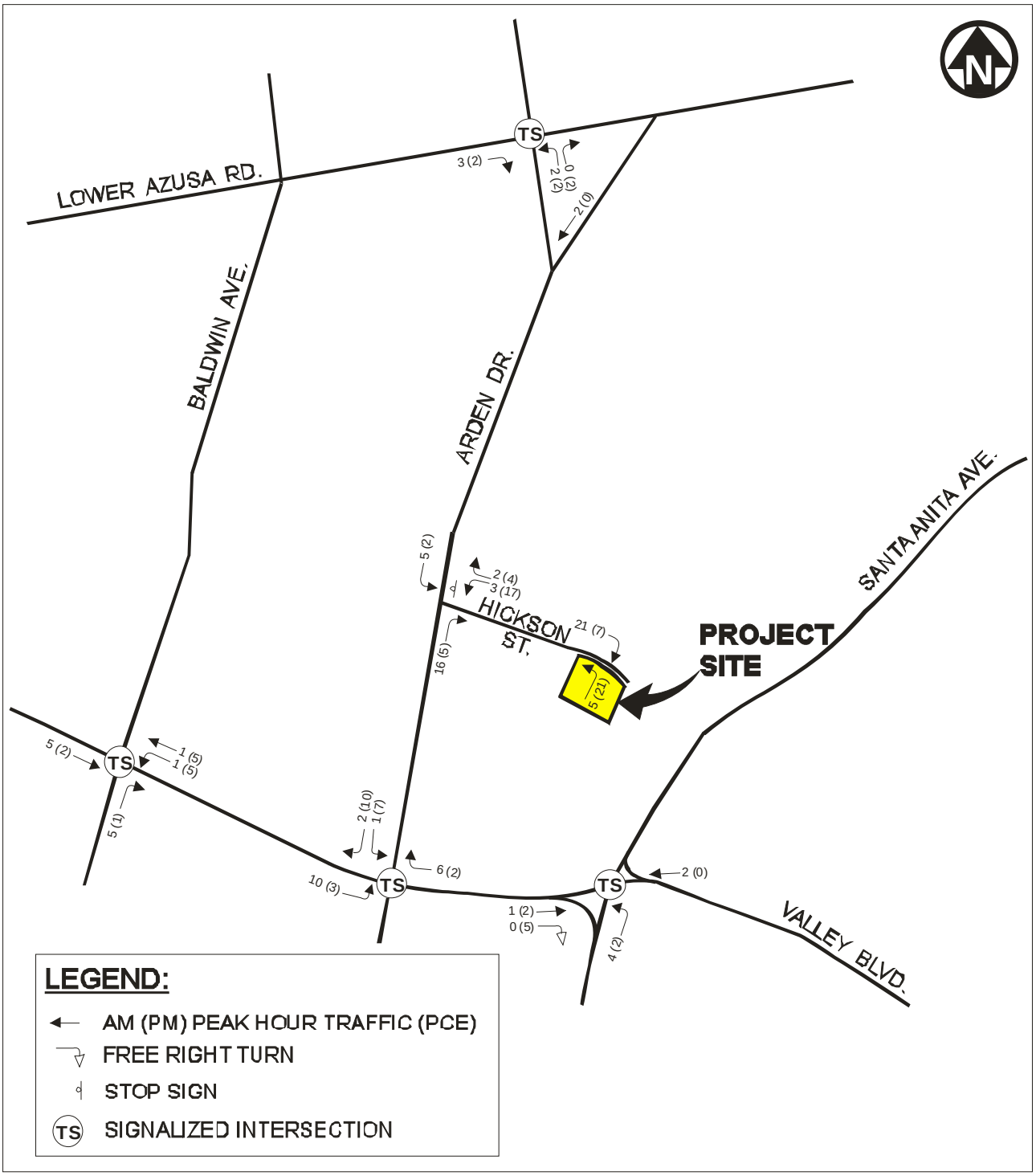

FUTURE (2016) PLUS PROJECT CONDITIONS

Future (2016) with cumulative project plus project traffic conditions were evaluated using the Intersection Capacity Utilization (ICU) method for signalized intersections and Highway Capacity Manual (HCM) method for unsignalized intersections. Detailed calculations relating to the study intersections are included in the Technical Appendix. The LOS and V/C ratios for the study intersections under future plus project conditions are summarized in Table 8.

TABLE 7
EXISTING (2015) AND FUTURE (2016) LEVEL OF SERVICE SUMMARY

Intersection	Control Type	Peak Hour	Existing 2015				Future 2016				Increase in V/C Ratio by Project
			2015 Without Project		2015 With Project		2016 Ambient + Cumulative Projects		2016 Ambient + Cumulative Projects + Project		
			LOS	V/C [Delay]	LOS	V/C [Delay]	LOS	V/C [Delay]	LOS	V/C [Delay]	
1. Baldwin Avenue & Valley Boulevard	Signal	AM	C	0.761	C	0.763	D	0.869	D	0.871	0.002
		PM	D	0.816	D	0.819	E	0.948	E	0.951	0.003
2. Arden Drive & Lower Azusa Road	Signal	AM	A	0.593	A	0.595	B	0.613	B	0.615	0.002
		PM	B	0.617	B	0.619	B	0.659	B	0.661	0.002
3. Arden Drive & Hickson Street	Unsignal	AM	C	[15.9]	C	[16.3]	C	[16.1]	C	[16.6]	[0.5]
		PM	C	[18.6]	C	[20.1]	C	[19.0]	C	[20.6]	[1.6]
4. Arden Drive & Valley Boulevard	Signal	AM	B	0.626	B	0.632	B	0.680	B	0.687	0.007
		PM	A	0.596	A	0.601	C	0.710	C	0.714	0.004
5. Santa Anita Avenue & Valley Boulevard	Signal	AM	C	0.734	C	0.736	D	0.899	D	0.901	0.002
		PM	C	0.749	C	0.750	E	0.934	E	0.934	0.000

As shown in Table 7, the Baldwin Avenue and Valley Boulevard and the Santa Anita Avenue and Valley Boulevard intersections are expected to operate at a Level of Service (LOS) D and E during the AM and PM peak hours, respectively. However, LOS E maybe acceptable at truck-route Intersections or roadways per the City of El Monte General Plan (June 2011). In addition, it is expected to have 0.3% or less increase in Volume-to-Capacity (V/C) ratio by the project at both the intersections. Therefore, the project is not expected to have significant impacts at both the Baldwin Avenue and Valley Boulevard and the Santa Anita Avenue and Valley Boulevard intersections.

The rest of the study intersections are expected to operate at LOS D or better during both the AM and PM peak hours without any significant impacts.

PROJECT IMPACT AND MITIGATION MEAUSURES

As indicated in the previous section, all the five (5) study intersections would operate at an acceptable level of service during both the AM and PM peak hours under 2016 Ambient plus Cumulative Projects and Project Conditions as well as the other conditions.

PARKING DEMAND ANALYSIS

The proposed building area is 67,111 square feet including a 54,411 square-foot warehouse and 12,700 square-foot office area. The requirement for parking for this project is 1 space per 400 square feet of floor area for the first 5,000 square feet of gross floor area, 1 space per 500 square feet of floor area for the next 5,000 square feet of gross floor area, 1 space per 750 square feet of floor area after the next 15,000 square feet and 1 space per 1,500 square feet of floor area after the first 25,000 square feet. Since the total office space does not occupy more than 25% of the total floor area, the office space is counted as industrial/warehouse space per 17.08.090 Parking Requirements for Specific Land Uses. The total parking requirement of the project is 71 spaces [= 5,000 / 400 + (10,000 – 5,000) / 500 + (25,000 – 10,000) / 750 + (67,111 – 25,000) / 1,500]. The number of proposed parking spaces is a total of 99 spaces on-site. Therefore, the project's parking demand would be satisfied on-site in accordance with the parking code requirements of the City of El Monte. Table 8 presents parking requirement of the City of El Monte.

TABLE 8
PARKING REQUIREMENT

USE	SQUARE FEET	SQUARE FEET OF GFA	PARKING RATIO		PARKING SPACE REQUIRED	PARKING SPACE PROVIDED
WAREHOUSE (54,411 SF)	67,111	UP TO 5,000	1	PER 400 SF	13	99
		5,001 TO 10,000	1	PER 500 SF	10	
		10,001 TO 25,000	1	PER 750 SF	20	
		25,001 AND UP	1	PER 1,500 SF	28	
OFFICE (12,700 SF)		18% (= 12,700 / 67,111) OF TOTAL FLOOR AREA				
TOTAL	67,111	-	-		71	

ON-SITE CIRCULATION ANALYSIS

The project would provide a full access driveway on Hickson Street to accommodate necessary turning radii for large trucks that would ingress/egress the site. In addition, the docking area as designed appears to be sufficient to accommodate necessary truck maneuvers.

TRUCK TURNING TEMPLATE ANALYSIS

As presented in Appendix C, the truck turning template analyses were conducted for interstate semitrailer (W-20 [W-65 and W-67]) design vehicles based on “A Policy on Geometric Design of Highway and Street.”

At the Arden Drive and Hickson Street intersection, trucks from northbound to eastbound would encroach against the westbound traffic lane at the eastern leg of the intersection. Therefore, red curb needs to be installed on both the north and south sides of Hickson Street for northbound trucks to make a right-turn, and on the east side of Arden Drive for westbound trucks to make a right-turn at the intersection.

CONCLUSION

Based on the results of the traffic impact analysis, the proposed Hickson Street warehouse project would not have any significant impacts on level of service (LOS) at any of the key intersections analyzed in the surrounding roadway system.

A review of Congestion Management Program (CMP) guidelines was also conducted. Since the project will not add 50 or more trips to any CMP arterial monitoring intersection during either the AM or PM weekday peak hours, no CMP arterial monitoring intersection was analyzed in this TIA. The project will not add 150 or more trips on the freeway mainline traffic volume in any direction during the AM or the PM weekday peak hours. Therefore, no freeway monitoring location was required to be analyzed per CMP guidelines.

The projects parking demand and the number of parking spaces provided for parking have also been analyzed using the City's parking code, and found to adequately meet the requirements for parking. On-site circulation and truck docking have also been analyzed and found to meet the project's needs.

At the Arden Drive and Hickson Street intersection red curb needs to be installed on both the north and south sides of Hickson Street for northbound trucks to make a right-turn, and on the east side of Arden Drive for westbound trucks to make a right-turn.

APPENDIX A
EXISTING 2015 TRAFFIC COUNTS

CITY TRAFFIC COUNTERS

WWW.CTCOUNTERS.COM

File Name : Baldwin_Valley
Site Code : 00000000
Start Date : 7/21/2015
Page No : 1

Groups Printed- Unshifted

	Baldwin Ave Southbound			Valley Blvd Westbound			Baldwin Ave Northbound			Valley Blvd Eastbound			
Start Time	Left	Thru	Right	Left	Thru	Right	Left	Thru	Right	Left	Thru	Right	Int. Total
07:00 AM	13	119	17	40	181	14	27	62	24	16	70	31	614
07:15 AM	12	129	21	49	168	16	31	97	15	10	90	39	677
07:30 AM	18	147	18	45	140	28	36	86	26	14	115	57	730
07:45 AM	23	197	28	51	155	30	32	122	43	17	95	59	852
Total	66	592	84	185	644	88	126	367	108	57	370	186	2873
08:00 AM	20	169	20	50	180	39	25	111	35	25	107	48	829
08:15 AM	23	188	21	50	202	35	32	111	48	17	109	54	890
08:30 AM	24	172	27	43	190	31	24	103	41	12	103	63	833
08:45 AM	34	199	28	39	161	27	22	132	33	25	82	49	831
Total	101	728	96	182	733	132	103	457	157	79	401	214	3383
04:00 PM	26	97	30	40	134	26	31	151	51	25	189	33	833
04:15 PM	24	117	32	31	113	24	29	167	37	24	196	35	829
04:30 PM	35	129	31	27	121	28	31	174	50	24	169	42	861
04:45 PM	34	115	25	26	135	24	28	182	58	29	175	37	868
Total	119	458	118	124	503	102	119	674	196	102	729	147	3391
05:00 PM	37	116	25	45	148	19	25	181	56	21	209	28	910
05:15 PM	30	119	27	35	168	27	51	201	58	45	174	41	976
05:30 PM	35	113	27	50	178	35	31	197	53	31	166	27	943
05:45 PM	39	114	29	29	177	40	31	210	52	30	179	32	962
Total	141	462	108	159	671	121	138	789	219	127	728	128	3791
Grand Total	427	2240	406	650	2551	443	486	2287	680	365	2228	675	13438
Apprch %	13.9	72.9	13.2	17.8	70	12.2	14.1	66.2	19.7	11.2	68.2	20.7	
Total %	3.2	16.7	3	4.8	19	3.3	3.6	17	5.1	2.7	16.6	5	

CITY TRAFFIC COUNTERS

WWW.CTCOUNTERS.COM

File Name : Baldwin_Valley
Site Code : 00000000
Start Date : 7/21/2015
Page No : 2

	Baldwin Ave Southbound				Valley Blvd Westbound				Baldwin Ave Northbound				Valley Blvd Eastbound				
Start Time	Left	Thru	Right	App. Total	Left	Thru	Right	App. Total	Left	Thru	Right	App. Total	Left	Thru	Right	App. Total	Int. Total
Peak Hour Analysis From 07:00 AM to 11:45 AM - Peak 1 of 1																	
Peak Hour for Entire Intersection Begins at 07:45 AM																	
07:45 AM	23	**197**	**28**	**248**	**51**	155	30	236	**32**	**122**	43	**197**	17	95	59	171	852
08:00 AM	20	169	20	209	50	180	**39**	269	25	111	35	171	**25**	107	48	**180**	829
08:15 AM	23	188	21	232	50	**202**	35	**287**	32	111	**48**	191	17	**109**	54	180	**890**
08:30 AM	**24**	172	27	223	43	190	31	264	24	103	41	168	12	103	**63**	178	833
Total Volume	90	726	96	912	194	727	135	1056	113	447	167	727	71	414	224	709	3404
% App. Total	9.9	79.6	10.5		18.4	68.8	12.8		15.5	61.5	23		10	58.4	31.6		
PHF	.938	.921	.857	.919	.951	.900	.865	.920	.883	.916	.870	.923	.710	.950	.889	.985	.956

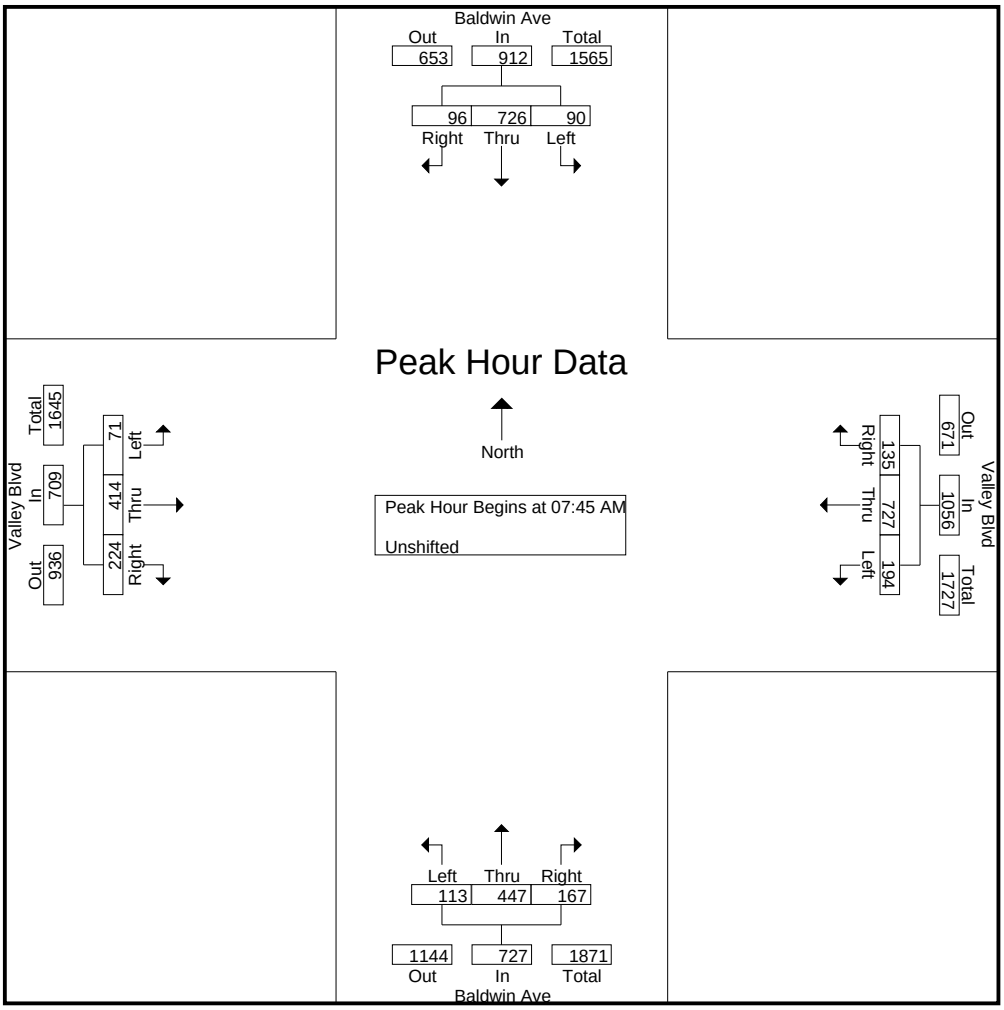

CITY TRAFFIC COUNTERS

WWW.CTCOUNTERS.COM

File Name : Baldwin_Valley
Site Code : 00000000
Start Date : 7/21/2015
Page No : 3

	Baldwin Ave Southbound				Valley Blvd Westbound				Baldwin Ave Northbound				Valley Blvd Eastbound				
Start Time	Left	Thru	Right	App. Total	Left	Thru	Right	App. Total	Left	Thru	Right	App. Total	Left	Thru	Right	App. Total	Int. Total
Peak Hour Analysis From 12:00 PM to 05:45 PM - Peak 1 of 1																	
Peak Hour for Entire Intersection Begins at 05:00 PM																	
05:00 PM	37	116	25	178	45	148	19	212	25	181	56	262	21	**209**	28	258	910
05:15 PM	30	**119**	27	176	35	168	27	230	**51**	201	**58**	**310**	**45**	174	**41**	**260**	**976**
05:30 PM	35	113	27	175	**50**	**178**	35	**263**	31	197	53	281	31	166	27	224	943
05:45 PM	**39**	114	**29**	**182**	29	177	**40**	246	31	**210**	52	293	30	179	32	241	962
Total Volume	141	462	108	711	159	671	121	951	138	789	219	1146	127	728	128	983	3791
% App. Total	19.8	65	15.2		16.7	70.6	12.7		12	68.8	19.1		12.9	74.1	13		
PHF	.904	.971	.931	.977	.795	.942	.756	.904	.676	.939	.944	.924	.706	.871	.780	.945	.971

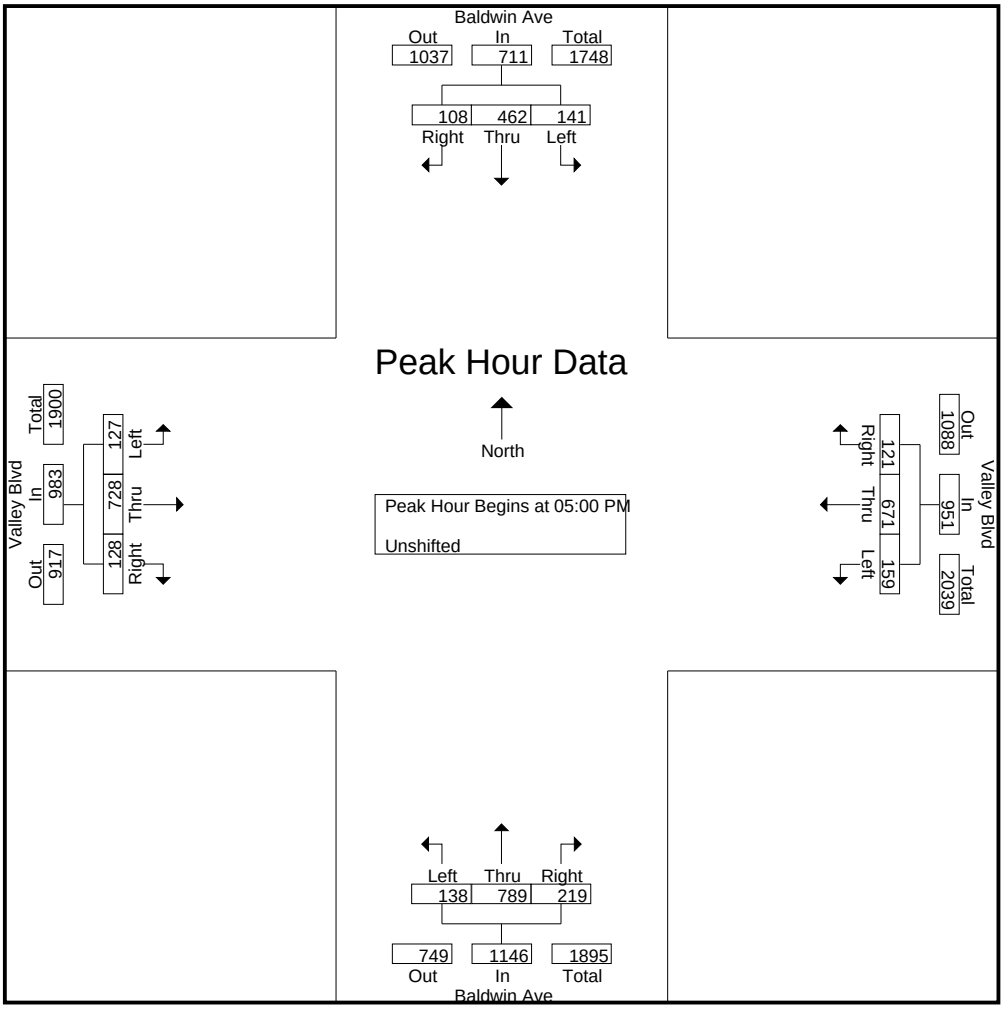

CITY TRAFFIC COUNTERS
WWW.CTCOUNTERS.COM

File Name : Arden_LowerAzusa
Site Code : 00000000
Start Date : 7/21/2015
Page No : 1

Groups Printed- Unshifted

	Arden Dr Southbound			Lower Azusa Rd Westbound			Arden Dr Northbound			Lower Azusa Rd Eastbound			
Start Time	Left	Thru	Right	Left	Thru	Right	Left	Thru	Right	Left	Thru	Right	Int. Total
07:00 AM	4	25	9	21	191	7	17	17	6	1	74	12	384
07:15 AM	1	20	5	15	186	7	16	10	3	3	74	21	361
07:30 AM	4	33	10	21	216	7	23	15	9	1	100	28	467
07:45 AM	5	42	7	19	191	8	29	25	4	2	100	24	456
Total	14	120	31	76	784	29	85	67	22	7	348	85	1668
08:00 AM	4	27	13	33	213	5	26	17	3	9	103	25	478
08:15 AM	8	26	10	21	229	6	28	20	1	2	132	29	512
08:30 AM	11	22	8	30	252	12	31	15	6	7	106	22	522
08:45 AM	13	23	13	27	253	10	31	18	14	8	100	24	534
Total	36	98	44	111	947	33	116	70	24	26	441	100	2046
04:00 PM	7	11	4	14	176	4	23	14	15	5	228	15	516
04:15 PM	6	10	4	19	158	11	22	15	6	7	222	24	504
04:30 PM	7	14	6	16	135	5	24	20	8	6	229	24	494
04:45 PM	13	12	6	17	142	12	20	26	9	6	206	18	487
Total	33	47	20	66	611	32	89	75	38	24	885	81	2001
05:00 PM	12	19	5	10	172	8	25	41	5	12	230	25	564
05:15 PM	12	18	13	16	188	8	33	28	14	9	262	23	624
05:30 PM	10	12	6	16	162	11	32	20	12	9	207	26	523
05:45 PM	9	19	13	11	155	4	33	25	13	17	257	30	586
Total	43	68	37	53	677	31	123	114	44	47	956	104	2297
Grand Total	126	333	132	306	3019	125	413	326	128	104	2630	370	8012
Apprch %	21.3	56.3	22.3	8.9	87.5	3.6	47.6	37.6	14.8	3.4	84.7	11.9	
Total %	1.6	4.2	1.6	3.8	37.7	1.6	5.2	4.1	1.6	1.3	32.8	4.6	

CITY TRAFFIC COUNTERS
WWW.CTCOUNTERS.COM

File Name : Arden_LowerAzusa
Site Code : 00000000
Start Date : 7/21/2015
Page No : 2

	Arden Dr Southbound				Lower Azusa Rd Westbound				Arden Dr Northbound				Lower Azusa Rd Eastbound				
Start Time	Left	Thru	Right	App. Total	Left	Thru	Right	App. Total	Left	Thru	Right	App. Total	Left	Thru	Right	App. Total	Int. Total
Peak Hour Analysis From 07:00 AM to 11:45 AM - Peak 1 of 1																	
Peak Hour for Entire Intersection Begins at 08:00 AM																	
08:00 AM	4	**27**	**13**	44	**33**	213	5	251	26	17	3	46	**9**	103	25	137	478
08:15 AM	8	26	10	44	21	229	6	256	28	**20**	1	49	2	**132**	**29**	**163**	512
08:30 AM	11	22	8	41	30	252	**12**	**294**	**31**	15	6	52	7	106	22	135	522
08:45 AM	**13**	23	13	**49**	27	**253**	10	290	31	18	**14**	**63**	8	100	24	132	**534**
Total Volume	36	98	44	178	111	947	33	1091	116	70	24	210	26	441	100	567	2046
% App. Total	20.2	55.1	24.7		10.2	86.8	3		55.2	33.3	11.4		4.6	77.8	17.6		
PHF	.692	.907	.846	.908	.841	.936	.688	.928	.935	.875	.429	.833	.722	.835	.862	.870	.958

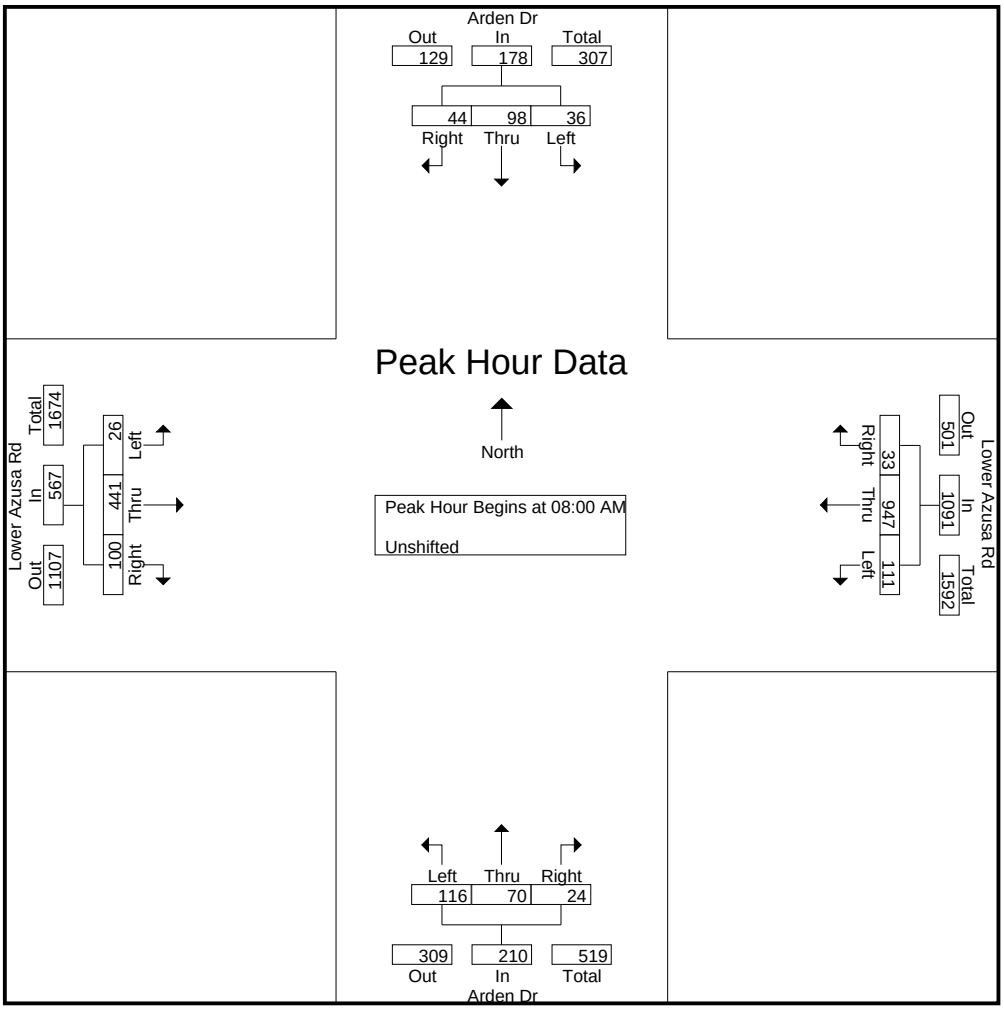

CITY TRAFFIC COUNTERS
WWW.CTCOUNTERS.COM

File Name : Arden_LowerAzusa
Site Code : 00000000
Start Date : 7/21/2015
Page No : 3

	Arden Dr Southbound				Lower Azusa Rd Westbound				Arden Dr Northbound				Lower Azusa Rd Eastbound				
Start Time	Left	Thru	Right	App. Total	Left	Thru	Right	App. Total	Left	Thru	Right	App. Total	Left	Thru	Right	App. Total	Int. Total
Peak Hour Analysis From 12:00 PM to 05:45 PM - Peak 1 of 1																	
Peak Hour for Entire Intersection Begins at 05:00 PM																	
05:00 PM	**12**	**19**	5	36	10	172	8	190	25	**41**	5	71	12	230	25	267	564
05:15 PM	12	18	**13**	**43**	**16**	**188**	8	**212**	**33**	28	**14**	**75**	9	**262**	23	294	**624**
05:30 PM	10	12	6	28	16	162	**11**	189	32	20	12	64	9	207	26	242	523
05:45 PM	9	19	13	41	11	155	4	170	33	25	13	71	**17**	257	**30**	**304**	586
Total Volume	43	68	37	148	53	677	31	761	123	114	44	281	47	956	104	1107	2297
% App. Total	29.1	45.9	25		7	89	4.1		43.8	40.6	15.7		4.2	86.4	9.4		
PHF	.896	.895	.712	.860	.828	.900	.705	.897	.932	.695	.786	.937	.691	.912	.867	.910	.920

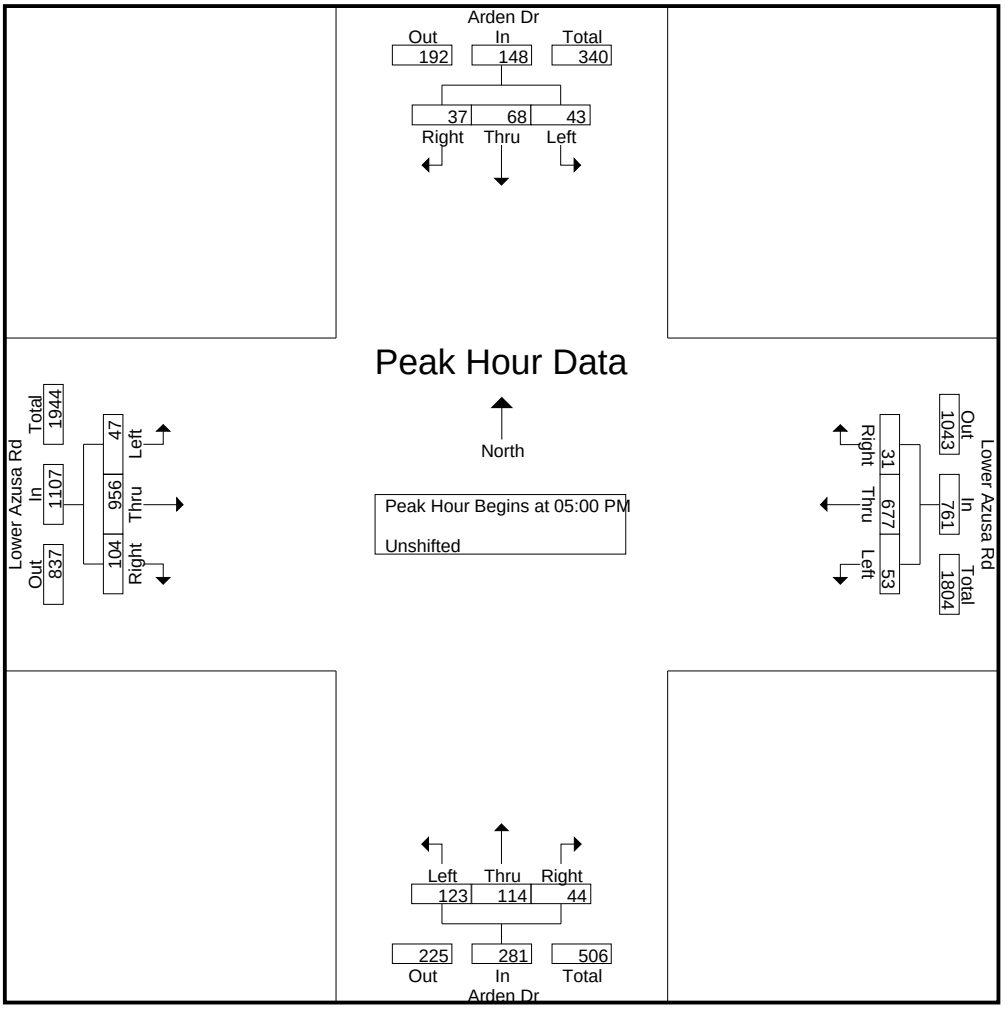

CITY TRAFFIC COUNTERS

WWW.CTCOUNTERS.COM

File Name : Arden_Hickson
Site Code : 00000000
Start Date : 7/21/2015
Page No : 1

Groups Printed- Unshifted

	Arden Dr Southbound			Hickson St Westbound			Arden Dr Northbound			Eastbound			
Start Time	Left	Thru	Right	Left	Thru	Right	Left	Thru	Right	Left	Thru	Right	Int. Total
07:00 AM	1	104	0	5	0	1	0	39	1	0	0	0	151
07:15 AM	1	113	0	5	0	1	0	43	9	0	0	0	172
07:30 AM	3	124	0	9	0	0	0	40	13	0	0	0	189
07:45 AM	1	143	0	10	0	4	0	71	22	0	0	0	251
Total	6	484	0	29	0	6	0	193	45	0	0	0	763
08:00 AM	1	139	0	22	0	0	0	58	18	0	0	0	238
08:15 AM	4	150	0	18	0	1	0	69	15	0	0	0	257
08:30 AM	1	146	0	9	0	0	0	67	22	0	0	0	245
08:45 AM	5	112	0	12	0	1	0	70	15	0	0	0	215
Total	11	547	0	61	0	2	0	264	70	0	0	0	955
04:00 PM	0	74	0	7	0	1	0	99	7	0	0	0	188
04:15 PM	1	71	0	5	0	0	0	102	8	0	0	0	187
04:30 PM	1	83	0	8	0	3	0	118	6	0	0	0	219
04:45 PM	1	93	0	4	0	3	0	100	12	0	0	0	213
Total	3	321	0	24	0	7	0	419	33	0	0	0	807
05:00 PM	1	99	0	19	0	2	0	132	11	0	0	0	264
05:15 PM	2	78	0	7	0	4	0	144	11	0	0	0	246
05:30 PM	1	88	0	10	0	3	0	161	13	0	0	0	276
05:45 PM	0	93	0	13	0	2	0	120	8	0	0	0	236
Total	4	358	0	49	0	11	0	557	43	0	0	0	1022
Grand Total	24	1710	0	163	0	26	0	1433	191	0	0	0	3547
Apprch %	1.4	98.6	0	86.2	0	13.8	0	88.2	11.8	0	0	0	
Total %	0.7	48.2	0	4.6	0	0.7	0	40.4	5.4	0	0	0	

CITY TRAFFIC COUNTERS

WWW.CTCOUNTERS.COM

File Name : Arden_Hickson
Site Code : 00000000
Start Date : 7/21/2015
Page No : 2

	Arden Dr Southbound				Hickson St Westbound				Arden Dr Northbound				Eastbound				
Start Time	Left	Thru	Right	App. Total	Left	Thru	Right	App. Total	Left	Thru	Right	App. Total	Left	Thru	Right	App. Total	Int. Total
Peak Hour Analysis From 07:00 AM to 11:45 AM - Peak 1 of 1																	
Peak Hour for Entire Intersection Begins at 07:45 AM																	
07:45 AM	1	143	0	144	10	0	**4**	14	0	**71**	**22**	**93**	0	0	0	0	251
08:00 AM	1	139	0	140	**22**	0	0	**22**	0	58	18	76	0	0	0	0	238
08:15 AM	**4**	**150**	0	**154**	18	0	1	19	0	69	15	84	0	0	0	0	**257**
08:30 AM	1	146	0	147	9	0	0	9	0	67	22	89	0	0	0	0	245
Total Volume	7	578	0	585	59	0	5	64	0	265	77	342	0	0	0	0	991
% App. Total	1.2	98.8	0		92.2	0	7.8		0	77.5	22.5		0	0	0		
PHF	.438	.963	.000	.950	.670	.000	.313	.727	.000	.933	.875	.919	.000	.000	.000	.000	.964

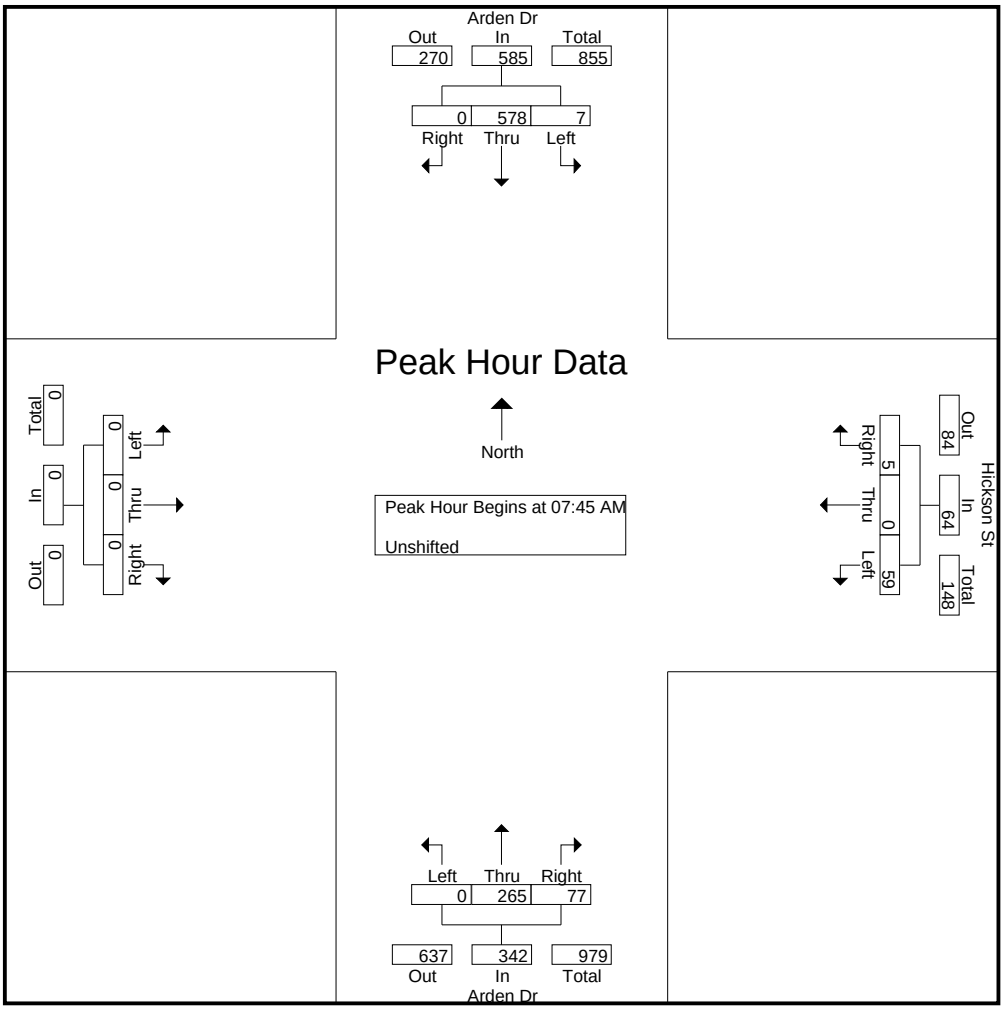

CITY TRAFFIC COUNTERS

WWW.CTCOUNTERS.COM

File Name : Arden_Hickson
Site Code : 00000000
Start Date : 7/21/2015
Page No : 3

	Arden Dr Southbound				Hickson St Westbound				Arden Dr Northbound				Eastbound				
Start Time	Left	Thru	Right	App. Total	Left	Thru	Right	App. Total	Left	Thru	Right	App. Total	Left	Thru	Right	App. Total	Int. Total
Peak Hour Analysis From 12:00 PM to 05:45 PM - Peak 1 of 1																	
Peak Hour for Entire Intersection Begins at 05:00 PM																	
05:00 PM	1	**99**	0	**100**	**19**	0	2	**21**	0	132	11	143	0	0	0	0	264
05:15 PM	**2**	78	0	80	7	0	**4**	11	0	144	11	155	0	0	0	0	246
05:30 PM	1	88	0	89	10	0	3	13	0	**161**	**13**	**174**	0	0	0	0	**276**
05:45 PM	0	93	0	93	13	0	2	15	0	120	8	128	0	0	0	0	236
Total Volume	4	358	0	362	49	0	11	60	0	557	43	600	0	0	0	0	1022
% App. Total	1.1	98.9	0		81.7	0	18.3		0	92.8	7.2		0	0	0		
PHF	.500	.904	.000	.905	.645	.000	.688	.714	.000	.865	.827	.862	.000	.000	.000	.000	.926

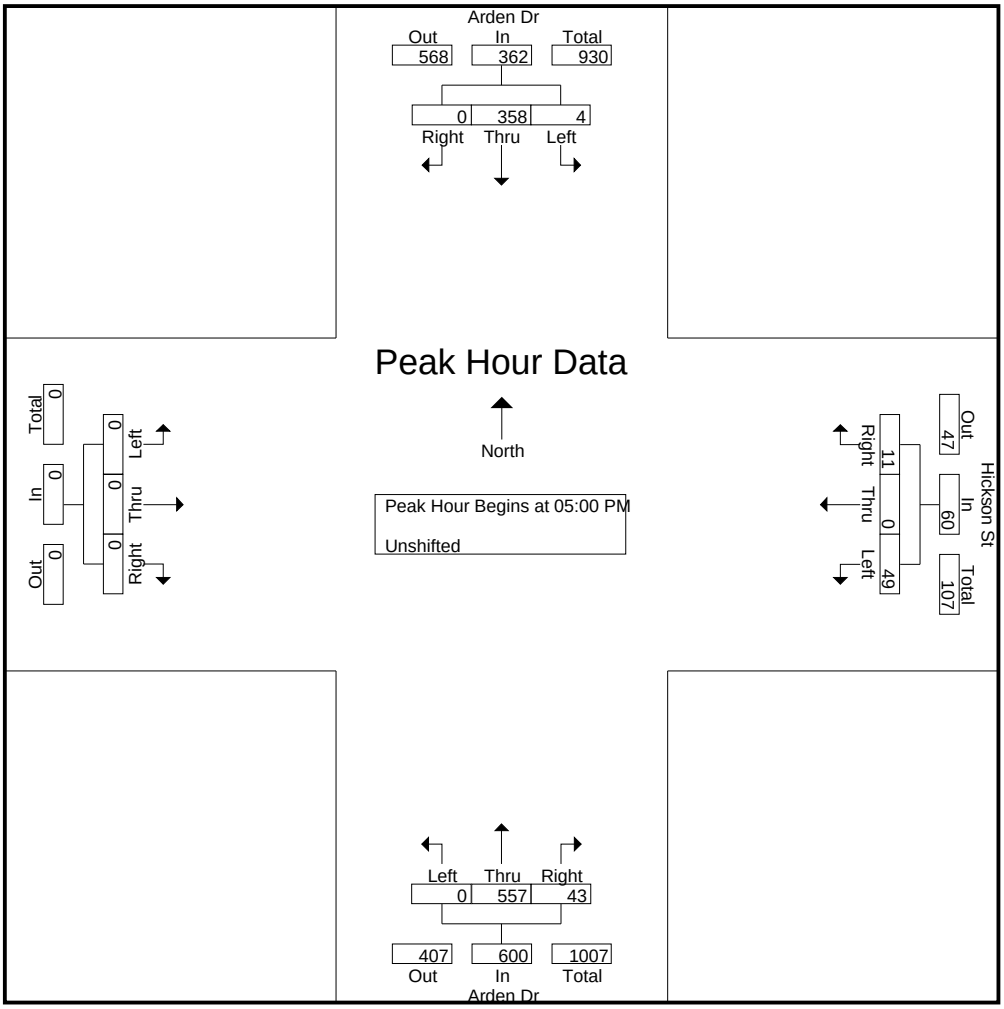

CITY TRAFFIC COUNTERS

WWW.CTCOUNTERS.COM

File Name : Arden_Valley
Site Code : 00000000
Start Date : 7/21/2015
Page No : 1

Groups Printed- Unshifted

	Driveway Southbound			Valley Blvd Westbound			Arden Dr Northbound			Valley Blvd Eastbound			
Start Time	Left	Thru	Right	Left	Thru	Right	Left	Thru	Right	Left	Thru	Right	Int. Total
07:00 AM	80	1	38	1	189	32	0	1	0	9	97	0	448
07:15 AM	72	0	31	2	190	35	1	0	2	13	98	0	444
07:30 AM	90	0	29	0	192	57	1	0	0	25	117	1	512
07:45 AM	104	0	22	1	236	66	0	0	0	29	139	1	598
Total	346	1	120	4	807	190	2	1	2	76	451	2	2002
08:00 AM	120	0	39	0	220	67	1	0	0	26	135	3	611
08:15 AM	98	0	38	2	257	55	5	1	1	21	144	4	626
08:30 AM	103	4	38	2	243	56	1	0	1	18	133	2	601
08:45 AM	93	2	28	2	209	52	2	0	0	23	134	4	549
Total	414	6	143	6	929	230	9	1	2	88	546	13	2387
04:00 PM	87	0	21	3	151	74	1	1	0	21	221	3	583
04:15 PM	77	1	24	4	152	75	2	1	0	21	222	3	582
04:30 PM	94	0	13	0	156	56	2	1	2	22	233	2	581
04:45 PM	87	2	38	4	175	59	0	1	2	26	202	3	599
Total	345	3	96	11	634	264	5	4	4	90	878	11	2345
05:00 PM	110	2	31	3	182	66	2	3	1	32	246	3	681
05:15 PM	82	1	21	0	219	89	1	0	1	32	253	5	704
05:30 PM	72	4	28	3	215	94	3	2	1	34	189	5	650
05:45 PM	86	1	26	5	227	86	3	3	4	35	206	10	692
Total	350	8	106	11	843	335	9	8	7	133	894	23	2727
Grand Total	1455	18	465	32	3213	1019	25	14	15	387	2769	49	9461
Apprch %	75.1	0.9	24	0.8	75.4	23.9	46.3	25.9	27.8	12.1	86.4	1.5	
Total %	15.4	0.2	4.9	0.3	34	10.8	0.3	0.1	0.2	4.1	29.3	0.5	

CITY TRAFFIC COUNTERS

WWW.CTCOUNTERS.COM

File Name : Arden_Valley
Site Code : 00000000
Start Date : 7/21/2015
Page No : 2

	Driveway Southbound				Valley Blvd Westbound				Arden Dr Northbound				Valley Blvd Eastbound				
Start Time	Left	Thru	Right	App. Total	Left	Thru	Right	App. Total	Left	Thru	Right	App. Total	Left	Thru	Right	App. Total	Int. Total
Peak Hour Analysis From 07:00 AM to 11:45 AM - Peak 1 of 1																	
Peak Hour for Entire Intersection Begins at 07:45 AM																	
07:45 AM	104	0	22	126	1	236	66	303	0	0	0	0	**29**	139	1	**169**	598
08:00 AM	**120**	0	**39**	**159**	0	220	**67**	287	1	0	0	1	26	135	3	164	611
08:15 AM	98	0	38	136	**2**	**257**	55	**314**	**5**	**1**	**1**	**7**	21	**144**	**4**	169	**626**
08:30 AM	103	**4**	38	145	2	243	56	301	1	0	1	2	18	133	2	153	601
Total Volume	425	4	137	566	5	956	244	1205	7	1	2	10	94	551	10	655	2436
% App. Total	75.1	0.7	24.2		0.4	79.3	20.2		70	10	20		14.4	84.1	1.5		
PHF	.885	.250	.878	.890	.625	.930	.910	.959	.350	.250	.500	.357	.810	.957	.625	.969	.973

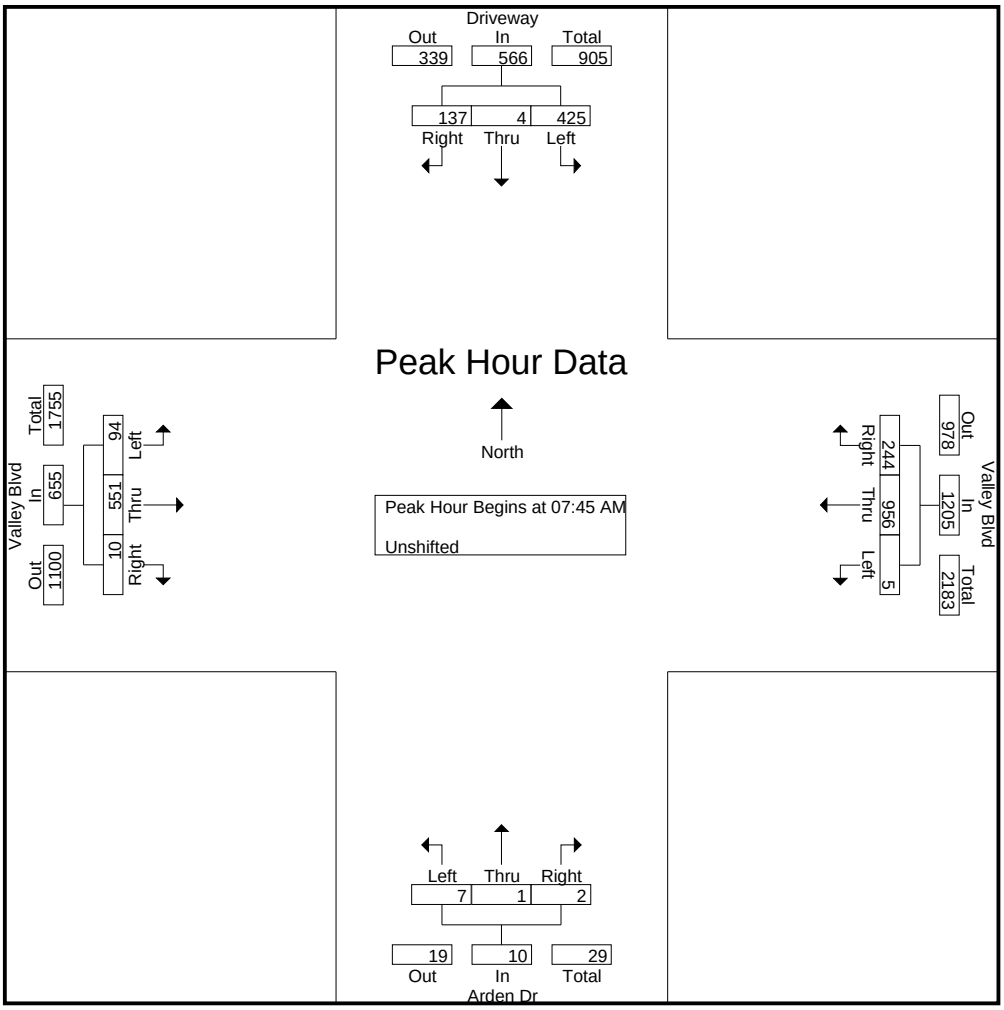

CITY TRAFFIC COUNTERS

WWW.CTCOUNTERS.COM

File Name : Arden_Valley
Site Code : 00000000
Start Date : 7/21/2015
Page No : 3

	Driveway Southbound				Valley Blvd Westbound				Arden Dr Northbound				Valley Blvd Eastbound				
Start Time	Left	Thru	Right	App. Total	Left	Thru	Right	App. Total	Left	Thru	Right	App. Total	Left	Thru	Right	App. Total	Int. Total
Peak Hour Analysis From 12:00 PM to 05:45 PM - Peak 1 of 1																	
Peak Hour for Entire Intersection Begins at 05:00 PM																	
05:00 PM	**110**	2	**31**	**143**	3	182	66	251	2	**3**	1	6	32	246	3	281	681
05:15 PM	82	1	21	104	0	219	89	308	1	0	1	2	32	**253**	5	**290**	**704**
05:30 PM	72	**4**	28	104	3	215	**94**	312	**3**	2	1	6	34	189	5	228	650
05:45 PM	86	1	26	113	**5**	**227**	86	**318**	3	3	**4**	**10**	**35**	206	**10**	251	692
Total Volume	350	8	106	464	11	843	335	1189	9	8	7	24	133	894	23	1050	2727
% App. Total	75.4	1.7	22.8		0.9	70.9	28.2		37.5	33.3	29.2		12.7	85.1	2.2		
PHF	.795	.500	.855	.811	.550	.928	.891	.935	.750	.667	.438	.600	.950	.883	.575	.905	.968

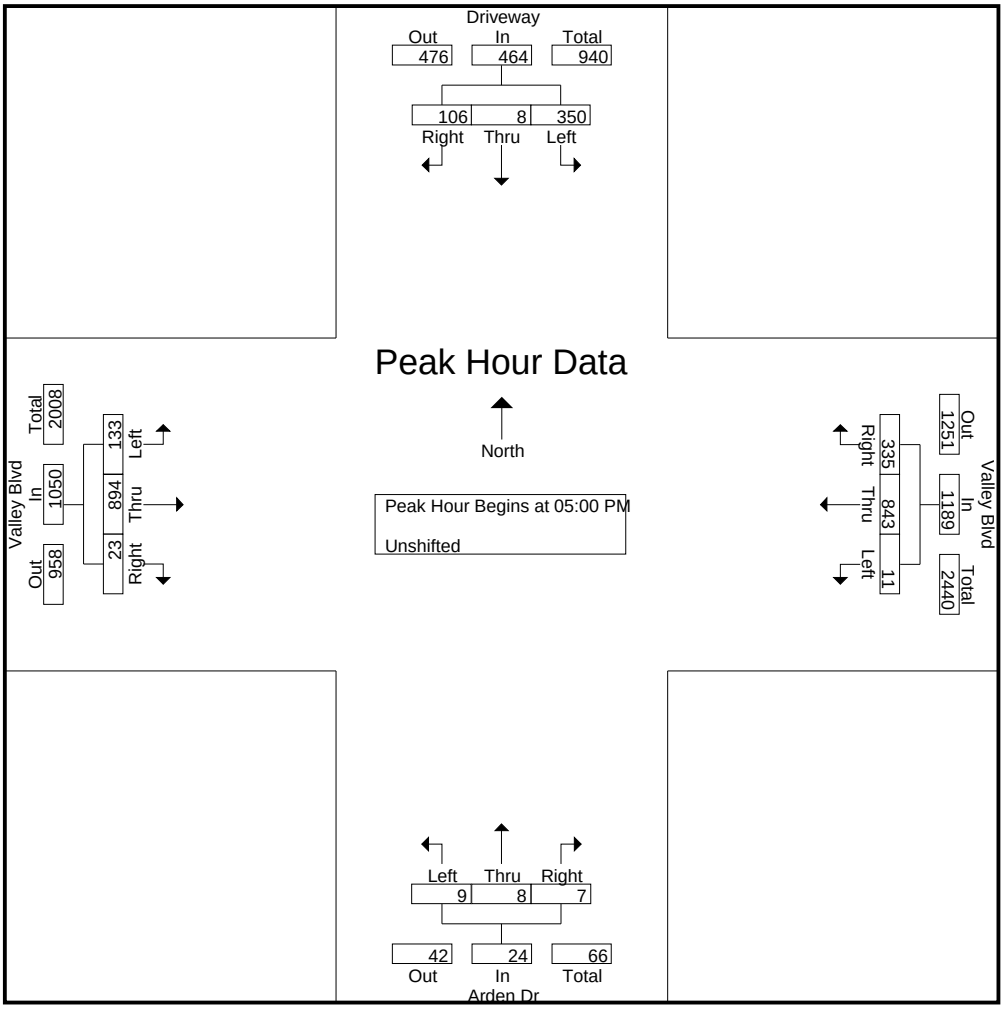

CITY TRAFFIC COUNTERS
WWW.CTCOUNTERS.COM

File Name : SantaAnita_Valley
Site Code : 00000000
Start Date : 7/21/2015
Page No : 1

Groups Printed- Unshifted

	Santa Anita Ave Southbound			Valley Blvd Westbound			Santa Anita Ave Northbound			Valley Blvd Eastbound			
Start Time	Left	Thru	Right	Left	Thru	Right	Left	Thru	Right	Left	Thru	Right	Int. Total
07:00 AM	4	189	41	15	161	4	39	74	10	24	80	0	641
07:15 AM	6	192	46	19	143	8	58	90	6	24	84	2	678
07:30 AM	9	223	61	9	187	3	50	134	6	19	89	2	792
07:45 AM	16	210	72	19	190	9	75	132	8	20	103	1	855
Total	35	814	220	62	681	24	222	430	30	87	356	5	2966
08:00 AM	14	185	80	11	164	9	87	137	10	28	85	0	810
08:15 AM	11	209	51	17	198	7	74	127	16	30	100	3	843
08:30 AM	7	199	72	17	178	10	67	131	9	19	123	3	835
08:45 AM	12	201	60	10	164	8	65	140	9	14	112	2	797
Total	44	794	263	55	704	34	293	535	44	91	420	8	3285
04:00 PM	11	145	39	12	122	8	94	190	19	67	179	5	891
04:15 PM	13	135	38	13	129	15	60	177	13	44	163	2	802
04:30 PM	12	148	29	15	113	14	84	192	15	57	170	2	851
04:45 PM	10	124	40	11	142	17	78	241	10	48	161	4	886
Total	46	552	146	51	506	54	316	800	57	216	673	13	3430
05:00 PM	15	131	47	9	129	17	99	225	17	54	183	0	926
05:15 PM	12	188	40	7	152	18	92	243	11	67	184	0	1014
05:30 PM	15	127	31	11	185	13	101	232	11	46	161	1	934
05:45 PM	21	140	49	13	179	15	125	240	17	39	175	0	1013
Total	63	586	167	40	645	63	417	940	56	206	703	1	3887
Grand Total	188	2746	796	208	2536	175	1248	2705	187	600	2152	27	13568
Apprch %	5	73.6	21.3	7.1	86.9	6	30.1	65.3	4.5	21.6	77.4	1	
Total %	1.4	20.2	5.9	1.5	18.7	1.3	9.2	19.9	1.4	4.4	15.9	0.2	

CITY TRAFFIC COUNTERS

WWW.CTCOUNTERS.COM

File Name : SantaAnita_Valley
Site Code : 00000000
Start Date : 7/21/2015
Page No : 2

	Santa Anita Ave Southbound				Valley Blvd Westbound				Santa Anita Ave Northbound				Valley Blvd Eastbound				
Start Time	Left	Thru	Right	App. Total	Left	Thru	Right	App. Total	Left	Thru	Right	App. Total	Left	Thru	Right	App. Total	Int. Total
Peak Hour Analysis From 07:00 AM to 11:45 AM - Peak 1 of 1																	
Peak Hour for Entire Intersection Begins at 07:45 AM																	
07:45 AM	**16**	**210**	72	**298**	**19**	190	9	218	75	132	8	215	20	103	1	124	**855**
08:00 AM	14	185	**80**	279	11	164	9	184	**87**	**137**	10	**234**	28	85	0	113	810
08:15 AM	11	209	51	271	17	**198**	7	**222**	74	127	**16**	217	**30**	100	**3**	133	843
08:30 AM	7	199	72	278	17	178	**10**	205	67	131	9	207	19	**123**	3	**145**	835
Total Volume	48	803	275	1126	64	730	35	829	303	527	43	873	97	411	7	515	3343
% App. Total	4.3	71.3	24.4		7.7	88.1	4.2		34.7	60.4	4.9		18.8	79.8	1.4		
PHF	.750	.956	.859	.945	.842	.922	.875	.934	.871	.962	.672	.933	.808	.835	.583	.888	.977

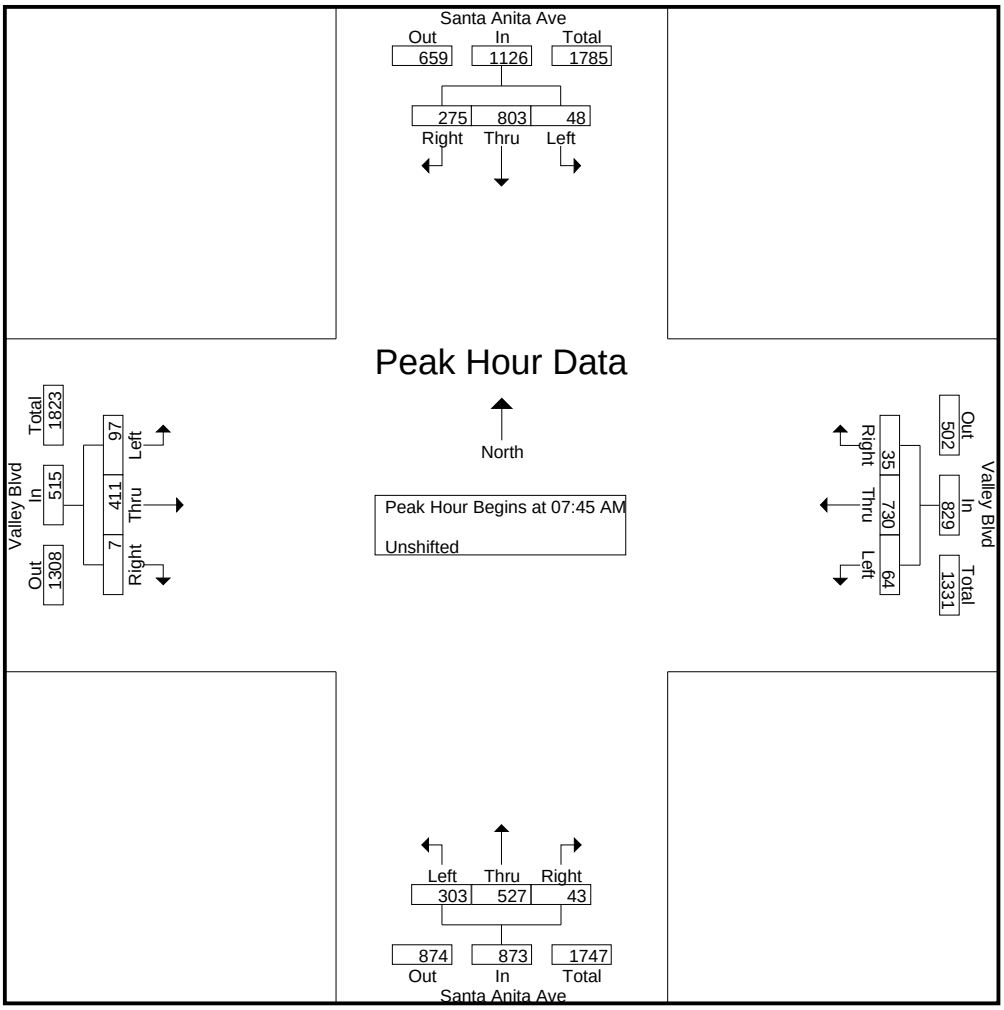

CITY TRAFFIC COUNTERS

WWW.CTCOUNTERS.COM

File Name : SantaAnita_Valley
Site Code : 00000000
Start Date : 7/21/2015
Page No : 3

	Santa Anita Ave Southbound				Valley Blvd Westbound				Santa Anita Ave Northbound				Valley Blvd Eastbound				
Start Time	Left	Thru	Right	App. Total	Left	Thru	Right	App. Total	Left	Thru	Right	App. Total	Left	Thru	Right	App. Total	Int. Total
Peak Hour Analysis From 12:00 PM to 05:45 PM - Peak 1 of 1																	
Peak Hour for Entire Intersection Begins at 05:00 PM																	
05:00 PM	15	131	47	193	9	129	17	155	99	225	**17**	341	54	183	0	237	926
05:15 PM	12	**188**	40	**240**	7	152	**18**	177	92	**243**	11	346	**67**	**184**	0	**251**	**1014**
05:30 PM	15	127	31	173	11	**185**	13	**209**	101	232	11	344	46	161	**1**	208	934
05:45 PM	**21**	140	**49**	210	**13**	179	15	207	**125**	240	17	**382**	39	175	0	214	1013
Total Volume	63	586	167	816	40	645	63	748	417	940	56	1413	206	703	1	910	3887
% App. Total	7.7	71.8	20.5		5.3	86.2	8.4		29.5	66.5	4		22.6	77.3	0.1		
PHF	.750	.779	.852	.850	.769	.872	.875	.895	.834	.967	.824	.925	.769	.955	.250	.906	.958

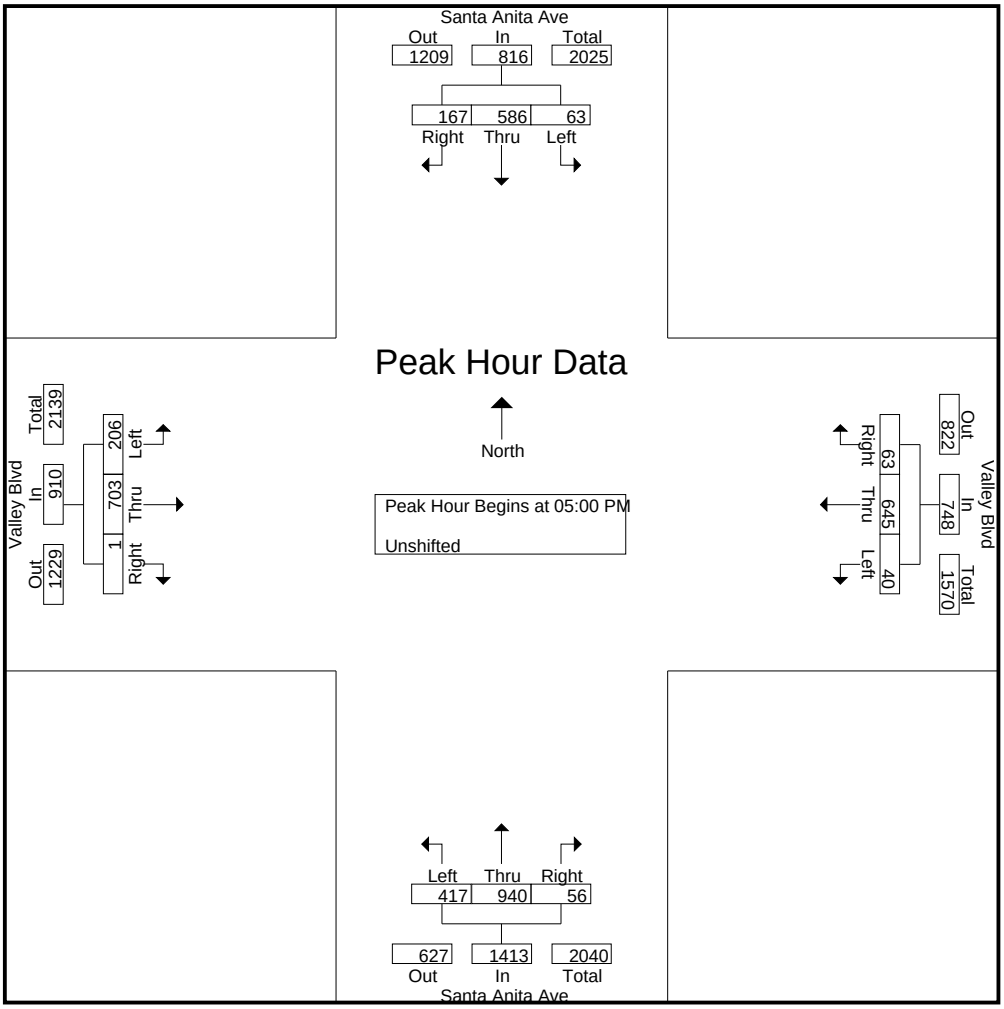

APPENDIX B
LEVEL OF SERVICE ANALYSIS SHEET

INTERSECTION CAPACITY UTILIZATION ANALYSIS

Location: Baldwin Avenue and Valley Boulevard **City:** El Monte
Project No. 148-05 **Analyzed By:** PBL **File Name:** PR1

Problem Condition: Existing 2015 Traffic Volumes (Count Date: 7/21/2015)
Existing Geometric Configuration

Movement	Available Lanes		Peak Hour Volumes								Movement V/C Per Lane		Critical V/C	
			Existing		Cumulative		Project		Study Vol.					
	No.	Cap.	AM	PM	AM	PM	AM	PM	AM	PM	AM	PM	AM	PM
N/B Left	1.0	1600	113	138					115	141	0.072	0.088	0.072	
N/B Thru	2.0	3200	447	789					456	805	0.142	0.251		0.251
N/B Right	1.0	1600	167	219					170	223	0.106	0.038		
S/B Left	1.0	1600	90	141					92	144	0.057	0.090		0.090
S/B Thru	2.0	3200	726	462					741	471	0.262	0.182	0.262	
S/B Right	0.0		96	108					98	110	0.000	0.000		
E/B Left	1.0	1600	71	127					72	130	0.045	0.081		
E/B Thru	2.0	3200	414	728					422	743	0.203	0.273	0.203	0.273
E/B Right	0.0		224	128					228	131	0.000	0.000		
W/B Left	1.0	1600	194	159					198	162	0.124	0.101	0.124	0.101
W/B Thru	2.0	3200	727	671					742	684	0.275	0.252		
W/B Right	0.0		135	121					138	123	0.000	0.000		
ANALYSIS RESULTS :									Sum Of Critical V/C:				0.661	0.716
									Lost Time:				0.100	0.100
									Total V/C:				0.761	0.816
									Level Of Service:				C	D

ASSUMPTIONS AND METHODOLOGY

Existing Counts Year: 2015
Study Volume Year: 2015
Annual Growth Factor: 1.50 Percent

Lane Capacity
Single Through Lane = 1600 Vehicles Per Hour
Single Turn Lane = 1600 Vehicles Per Hour
Dual Turn Lane = 2880 Vehicles Per Hour

LOS Definition

Total V/C	Level Of Service
Under 0.605	A
0.605 - 0.704	B
0.705 - 0.804	C
0.805 - 0.904	D
0.905 - 1.004	E
Over 1.005	F

Lost time for signal Yellow and All red intervals: 0.10 of V/C Ratio

NOTES: Since schools were not in session on the count date, existing volume was increased by 2%.

CROWN CITY ENGINEERS, CALIFORNIA

8/10/2015 - +

INTERSECTION CAPACITY UTILIZATION ANALYSIS

Location: Baldwin Avenue and Valley Boulevard **City:** El Monte
Project No. 148-05 **Analyzed By:** PBL **File Name:** PR1

Problem Condition: Existing 2015 Traffic Volumes with Project (Count Date: 7/21/2015)
Existing Geometric Configuration

Movement	Available Lanes		Peak Hour Volumes								Movement V/C Per Lane		Critical V/C	
			Existing		Cumulative		Project		Study Vol.					
	No.	Cap.	AM	PM	AM	PM	AM	PM	AM	PM	AM	PM	AM	PM
N/B Left	1.0	1600	113	138					115	141	0.072	0.088	0.072	
N/B Thru	2.0	3200	447	789					456	805	0.142	0.251		0.251
N/B Right	1.0	1600	167	219			5	1	175	224	0.110	0.036		
S/B Left	1.0	1600	90	141					92	144	0.057	0.090		0.090
S/B Thru	2.0	3200	726	462					741	471	0.262	0.182	0.262	
S/B Right	0.0		96	108					98	110	0.000	0.000		
E/B Left	1.0	1600	71	127					72	130	0.045	0.081		
E/B Thru	2.0	3200	414	728			5	2	427	745	0.205	0.273	0.205	0.273
E/B Right	0.0		224	128					228	131	0.000	0.000		
W/B Left	1.0	1600	194	159			1	5	199	167	0.124	0.104	0.124	0.104
W/B Thru	2.0	3200	727	671			1	5	743	689	0.275	0.254		
W/B Right	0.0		135	121					138	123	0.000	0.000		
ANALYSIS RESULTS :									Sum Of Critical V/C:				0.663	0.719
									Lost Time:				0.100	0.100
									Total V/C:				0.763	0.819
									Level Of Service:				C	D

ASSUMPTIONS AND METHODOLOGY

Existing Counts Year: 2015
Study Volume Year: 2015
Annual Growth Factor: 1.50 Percent

Lane Capacity
Single Through Lane = 1600 Vehicles Per Hour
Single Turn Lane = 1600 Vehicles Per Hour
Dual Turn Lane = 2880 Vehicles Per Hour

LOS Definition

Total V/C	Level Of Service
Under 0.605	A
0.605 - 0.704	B
0.705 - 0.804	C
0.805 - 0.904	D
0.905 - 1.004	E
Over 1.005	F

Lost time for signal Yellow and All red intervals: 0.10 of V/C Ratio

NOTES: Since schools were not in session on the count date, existing volume was increased by 2%.

CROWN CITY ENGINEERS, CALIFORNIA

8/10/2015 - +

INTERSECTION CAPACITY UTILIZATION ANALYSIS

Location: Baldwin Avenue and Valley Boulevard **City:** El Monte
Project No. 148-05 **Analyzed By:** PBL **File Name:** PR1

Problem Condition: Future 2016 Traffic Volumes & Cumulative Projects without Project
Existing Geometric Configuration

Movement	Available Lanes		Peak Hour Volumes								Movement V/C Per Lane		Critical V/C	
			Existing		Cumulative		Project		Study Vol.					
	No.	Cap.	AM	PM	AM	PM	AM	PM	AM	PM	AM	PM	AM	PM
N/B Left	1.0	1600	113	138	42	21			159	164	0.099	0.102	0.099	
N/B Thru	2.0	3200	447	789	0	0			463	817	0.145	0.255		0.255
N/B Right	1.0	1600	167	219	11	(2)			184	225	0.115	0.034		
S/B Left	1.0	1600	90	141	45	27			138	173	0.086	0.108		0.108
S/B Thru	2.0	3200	726	462	0	0			752	478	0.267	0.186	0.267	
S/B Right	0.0		96	108	3	5			102	117	0.000	0.000		
E/B Left	1.0	1600	71	127	5	9			79	140	0.049	0.088		
E/B Thru	2.0	3200	414	728	189	225			618	979	0.272	0.378	0.272	0.378
E/B Right	0.0		224	128	21	99			253	232	0.000	0.000		
W/B Left	1.0	1600	194	159	8	5			209	170	0.131	0.106	0.131	0.106
W/B Thru	2.0	3200	727	671	195	178			948	873	0.350	0.322		
W/B Right	0.0		135	121	34	31			174	156	0.000	0.000		
ANALYSIS RESULTS :									Sum Of Critical V/C:				0.769	0.848
									Lost Time:				0.100	0.100
									Total V/C:				0.869	0.948
									Level Of Service:				D	E

ASSUMPTIONS AND METHODOLOGY

Existing Counts Year: 2015
Study Volume Year: 2016
Annual Growth Factor: 1.50 Percent

Lane Capacity
Single Through Lane = 1600 Vehicles Per Hour
Single Turn Lane = 1600 Vehicles Per Hour
Dual Turn Lane = 2880 Vehicles Per Hour

LOS Definition

Total V/C	Level Of Service
Under 0.605	A
0.605 - 0.704	B
0.705 - 0.804	C
0.805 - 0.904	D
0.905 - 1.004	E
Over 1.005	F

Lost time for signal Yellow and All red intervals: 0.10 of V/C Ratio

NOTES: Since schools were not in session on the count date, existing volume was increased by 2%.

CROWN CITY ENGINEERS, CALIFORNIA

8/10/2015 - +

INTERSECTION CAPACITY UTILIZATION ANALYSIS

Location: Baldwin Avenue and Valley Boulevard **City:** El Monte
Project No. 148-05 **Analyzed By:** PBL **File Name:** PR1

Problem Condition: Future 2016 Traffic Volumes & Cumulative Projects with Project
Existing Geometric Configuration

Movement	Available Lanes		Peak Hour Volumes								Movement V/C Per Lane		Critical V/C	
			Existing		Cumulative		Project		Study Vol.					
	No.	Cap.	AM	PM	AM	PM	AM	PM	AM	PM	AM	PM	AM	PM
N/B Left	1.0	1600	113	138	42	21			159	164	0.099	0.102	0.099	
N/B Thru	2.0	3200	447	789	0	0			463	817	0.145	0.255		0.255
N/B Right	1.0	1600	167	219	11	(2)	5	1	189	226	0.118	0.032		
S/B Left	1.0	1600	90	141	45	27			138	173	0.086	0.108		0.108
S/B Thru	2.0	3200	726	462	0	0			752	478	0.267	0.186	0.267	
S/B Right	0.0		96	108	3	5			102	117	0.000	0.000		
E/B Left	1.0	1600	71	127	5	9			79	140	0.049	0.088		
E/B Thru	2.0	3200	414	728	189	225	5	2	623	981	0.274	0.379	0.274	0.379
E/B Right	0.0		224	128	21	99			253	232	0.000	0.000		
W/B Left	1.0	1600	194	159	8	5	1	5	210	175	0.131	0.109	0.131	0.109
W/B Thru	2.0	3200	727	671	195	178	1	5	949	878	0.351	0.323		
W/B Right	0.0		135	121	34	31			174	156	0.000	0.000		
ANALYSIS RESULTS :									Sum Of Critical V/C:				0.771	0.851
									Lost Time:				0.100	0.100
									Total V/C:				0.871	0.951
									Level Of Service:				D	E

ASSUMPTIONS AND METHODOLOGY

Existing Counts Year: 2015
Study Volume Year: 2016
Annual Growth Factor: 1.50 Percent

Lane Capacity
Single Through Lane = 1600 Vehicles Per Hour
Single Turn Lane = 1600 Vehicles Per Hour
Dual Turn Lane = 2880 Vehicles Per Hour

LOS Definition

Total V/C	Level Of Service
Under 0.605	A
0.605 - 0.704	B
0.705 - 0.804	C
0.805 - 0.904	D
0.905 - 1.004	E
Over 1.005	F

Lost time for signal Yellow and All red intervals: 0.10 of V/C Ratio

NOTES: Since schools were not in session on the count date, existing volume was increased by 2%.

CROWN CITY ENGINEERS, CALIFORNIA

8/10/2015 - +

INTERSECTION CAPACITY UTILIZATION ANALYSIS

Location: Arden Drive and Lower Azusa Road **City:** El Monte
Project No. 148-05 **Analyzed By:** PBL **File Name:** PR1

Problem Condition: Existing 2015 Traffic Volumes (Count Date: 7/21/2015)
Existing Geometric Configuration

Movement	Available Lanes		Peak Hour Volumes								Movement V/C Per Lane		Critical V/C	
			Existing		Cumulative		Project		Study Vol.					
	No.	Cap.	AM	PM	AM	PM	AM	PM	AM	PM	AM	PM	AM	PM
N/B Left	1.0	1600	116	123					118	125	0.074	0.078	0.074	0.078
N/B Thru	1.0	1600	70	114					71	116	0.060	0.101		
N/B Right	0.0		24	44					24	45	0.000	0.000		
S/B Left	1.0	1600	36	43					37	44	0.023	0.027		
S/B Thru	1.0	1600	98	68					100	69	0.091	0.067	0.091	0.067
S/B Right	0.0		44	37					45	38	0.000	0.000		
E/B Left	1.0	1600	26	47					27	48	0.017	0.030	0.017	
E/B Thru	2.0	3200	441	956					450	975	0.172	0.338		0.338
E/B Right	0.0		100	104					102	106	0.000	0.000		
W/B Left	1.0	1600	111	53					113	54	0.071	0.034		0.034
W/B Thru	2.0	3200	947	677					966	691	0.312	0.226	0.312	
W/B Right	0.0		33	31					34	32	0.000	0.000		
ANALYSIS RESULTS :									Sum Of Critical V/C:				0.493	0.517
									Lost Time:				0.100	0.100
									Total V/C:				0.593	0.617
									Level Of Service:				A	B

ASSUMPTIONS AND METHODOLOGY

Existing Counts Year: 2015
Study Volume Year: 2015
Annual Growth Factor: 1.50 Percent

Lane Capacity
Single Through Lane = 1600 Vehicles Per Hour
Single Turn Lane = 1600 Vehicles Per Hour
Dual Turn Lane = 2880 Vehicles Per Hour

LOS Definition

Total V/C	Level Of Service
Under 0.605	A
0.605 - 0.704	B
0.705 - 0.804	C
0.805 - 0.904	D
0.905 - 1.004	E
Over 1.005	F

Lost time for signal Yellow and All red intervals: 0.10 of V/C Ratio

NOTES: Since schools were not in session on the count date, existing volume was increased by 2%.

CROWN CITY ENGINEERS, CALIFORNIA

8/10/2015 - +

INTERSECTION CAPACITY UTILIZATION ANALYSIS

Location: Arden Drive and Lower Azusa Road **City:** El Monte
Project No. 148-05 **Analyzed By:** PBL **File Name:** PR1

Problem Condition: Existing 2015 Traffic Volumes with Project (Count Date: 7/21/2015)
Existing Geometric Configuration

Movement	Available Lanes		Peak Hour Volumes								Movement V/C Per Lane		Critical V/C	
			Existing		Cumulative		Project		Study Vol.					
	No.	Cap.	AM	PM	AM	PM	AM	PM	AM	PM	AM	PM	AM	PM
N/B Left	1.0	1600	116	123			2	2	120	127	0.075	0.080	0.075	0.080
N/B Thru	1.0	1600	70	114					71	116	0.060	0.102		
N/B Right	0.0		24	44			0	2	24	47	0.000	0.000		
S/B Left	1.0	1600	36	43					37	44	0.023	0.027		
S/B Thru	1.0	1600	98	68					100	69	0.091	0.067	0.091	0.067
S/B Right	0.0		44	37					45	38	0.000	0.000		
E/B Left	1.0	1600	26	47					27	48	0.017	0.030	0.017	
E/B Thru	2.0	3200	441	956					450	975	0.173	0.339		0.339
E/B Right	0.0		100	104			3	2	105	108	0.000	0.000		
W/B Left	1.0	1600	111	53					113	54	0.071	0.034		0.034
W/B Thru	2.0	3200	947	677					966	691	0.312	0.226	0.312	
W/B Right	0.0		33	31					34	32	0.000	0.000		
ANALYSIS RESULTS :									Sum Of Critical V/C:				0.495	0.519
									Lost Time:				0.100	0.100
									Total V/C:				0.595	0.619
									Level Of Service:				A	B

ASSUMPTIONS AND METHODOLOGY

Existing Counts Year: 2015
Study Volume Year: 2015
Annual Growth Factor: 1.50 Percent

Lane Capacity
Single Through Lane = 1600 Vehicles Per Hour
Single Turn Lane = 1600 Vehicles Per Hour
Dual Turn Lane = 2880 Vehicles Per Hour

LOS Definition

Total V/C	Level Of Service
Under 0.605	A
0.605 - 0.704	B
0.705 - 0.804	C
0.805 - 0.904	D
0.905 - 1.004	E
Over 1.005	F

Lost time for signal Yellow and All red intervals: 0.10 of V/C Ratio

NOTES: Since schools were not in session on the count date, existing volume was increased by 2%.

CROWN CITY ENGINEERS, CALIFORNIA

8/10/2015 - +

INTERSECTION CAPACITY UTILIZATION ANALYSIS

Location: Arden Drive and Lower Azusa Road **City:** El Monte
Project No. 148-05 **Analyzed By:** PBL **File Name:** PR1

Problem Condition: Future 2016 Traffic Volumes & Cumulative Projects without Project
Existing Geometric Configuration

Movement	Available Lanes		Peak Hour Volumes								Movement V/C Per Lane		Critical V/C	
			Existing		Cumulative		Project		Study Vol.					
	No.	Cap.	AM	PM	AM	PM	AM	PM	AM	PM	AM	PM	AM	PM
N/B Left	1.0	1600	116	123	11	26			131	153	0.082	0.096	0.082	0.096
N/B Thru	1.0	1600	70	114	7	18			79	136	0.065	0.113		
N/B Right	0.0		24	44	0	0			25	46	0.000	0.000		
S/B Left	1.0	1600	36	43	0	0			37	45	0.023	0.028		
S/B Thru	1.0	1600	98	68	9	17			110	87	0.098	0.079	0.098	0.079
S/B Right	0.0		44	37	0	0			46	38	0.000	0.000		
E/B Left	1.0	1600	26	47	0	0			27	49	0.017	0.030	0.017	
E/B Thru	2.0	3200	441	956	0	0			457	990	0.179	0.351		0.351
E/B Right	0.0		100	104	14	25			118	133	0.000	0.000		
W/B Left	1.0	1600	111	53	0	0			115	55	0.072	0.034		0.034
W/B Thru	2.0	3200	947	677	0	0			980	701	0.317	0.229	0.317	
W/B Right	0.0		33	31	0	0			34	32	0.000	0.000		
ANALYSIS RESULTS :									Sum Of Critical V/C:				0.513	0.559
									Lost Time:				0.100	0.100
									Total V/C:				0.613	0.659
									Level Of Service:				B	B

ASSUMPTIONS AND METHODOLOGY

Existing Counts Year: 2015
Study Volume Year: 2016
Annual Growth Factor: 1.50 Percent

Lane Capacity
Single Through Lane = 1600 Vehicles Per Hour
Single Turn Lane = 1600 Vehicles Per Hour
Dual Turn Lane = 2880 Vehicles Per Hour

LOS Definition

Total V/C	Level Of Service
Under 0.605	A
0.605 - 0.704	B
0.705 - 0.804	C
0.805 - 0.904	D
0.905 - 1.004	E
Over 1.005	F

Lost time for signal Yellow and All red intervals: 0.10 of V/C Ratio

NOTES: Since schools were not in session on the count date, existing volume was increased by 2%.

CROWN CITY ENGINEERS, CALIFORNIA

8/10/2015 - +

INTERSECTION CAPACITY UTILIZATION ANALYSIS

Location: Arden Drive and Lower Azusa Road **City:** El Monte
Project No. 148-05 **Analyzed By:** PBL **File Name:** PR1

Problem Condition: Future 2016 Traffic Volumes & Cumulative Projects with Project
Existing Geometric Configuration

Movement	Available Lanes		Peak Hour Volumes								Movement V/C Per Lane		Critical V/C	
			Existing		Growth		Project		Study Vol.					
	No.	Cap.	AM	PM	AM	PM	AM	PM	AM	PM	AM	PM	AM	PM
N/B Left	1.0	1600	116	123	11	26	2	2	133	155	0.083	0.097	0.083	0.097
N/B Thru	1.0	1600	70	114	7	18			79	136	0.065	0.115		
N/B Right	0.0		24	44	0	0	0	2	25	48	0.000	0.000		
S/B Left	1.0	1600	36	43	0	0			37	45	0.023	0.028		
S/B Thru	1.0	1600	98	68	9	17			110	87	0.098	0.079	0.098	0.079
S/B Right	0.0		44	37	0	0			46	38	0.000	0.000		
E/B Left	1.0	1600	26	47	0	0			27	49	0.017	0.030	0.017	
E/B Thru	2.0	3200	441	956	0	0			457	990	0.180	0.351		0.351
E/B Right	0.0		100	104	14	25	3	2	121	135	0.000	0.000		
W/B Left	1.0	1600	111	53	0	0			115	55	0.072	0.034		0.034
W/B Thru	2.0	3200	947	677	0	0			980	701	0.317	0.229	0.317	
W/B Right	0.0		33	31	0	0			34	32	0.000	0.000		
ANALYSIS RESULTS :									Sum Of Critical V/C:				0.515	0.561
									Lost Time:				0.100	0.100
									Total V/C:				0.615	0.661
									Level Of Service:				B	B

ASSUMPTIONS AND METHODOLOGY

Existing Counts Year: 2015
Study Volume Year: 2016
Annual Growth Factor: 1.50 Percent

Lane Capacity
Single Through Lane = 1600 Vehicles Per Hour
Single Turn Lane = 1600 Vehicles Per Hour
Dual Turn Lane = 2880 Vehicles Per Hour

LOS Definition

Total V/C	Level Of Service
Under 0.605	A
0.605 - 0.704	B
0.705 - 0.804	C
0.805 - 0.904	D
0.905 - 1.004	E
Over 1.005	F

Lost time for signal Yellow and All red intervals: 0.10 of V/C Ratio

NOTES: Since schools were not in session on the count date, existing volume was increased by 2%.

CROWN CITY ENGINEERS, CALIFORNIA

8/10/2015 - +

INTERSECTION CAPACITY UTILIZATION ANALYSIS

Location: Arden Drive and Valley Boulevard **City:** El Monte
Project No. 148-05 **Analyzed By:** PBL **File Name:** PR1

Problem Condition: Existing 2015 Traffic Volumes (Count Date: 7/21/2015)
Existing Geometric Configuration

Movement	Available Lanes		Peak Hour Volumes								Movement V/C Per Lane		Critical V/C	
			Existing		Cumulative		Project		Study Vol.					
	No.	Cap.	AM	PM	AM	PM	AM	PM	AM	PM	AM	PM	AM	PM
N/B Left	0.0		7	9					7	9	0.000	0.000		
N/B Thru	1.0	1600	1	8					1	8	0.006	0.015	0.006	0.015
N/B Right	0.0		2	7					2	7	0.000	0.000		
S/B Left	2.0	2800	425	350					434	357	0.155	0.128	0.155	0.128
S/B Thru	0.0		4	8					4	8	0.000	0.000		
S/B Right	1.0	1600	137	106					140	108	0.027	0.068		
E/B Left	1.0	1600	94	133					96	136	0.060	0.085	0.060	0.085
E/B Thru	2.0	3200	551	894					562	912	0.179	0.292		
E/B Right	0.0		10	23					10	23	0.000	0.000		
W/B Left	1.0	1600	5	11					5	11	0.003	0.007		
W/B Thru	2.0	3200	956	843					975	860	0.305	0.269	0.305	0.269
W/B Right	1.0	1600	244	335					249	342	0.020	0.102		
ANALYSIS RESULTS :									Sum Of Critical V/C:				0.526	0.496
									Lost Time:				0.100	0.100
									Total V/C:				0.626	0.596
									Level Of Service:				B	A

ASSUMPTIONS AND METHODOLOGY

Existing Counts Year: 2015
Study Volume Year: 2015
Annual Growth Factor: 1.50 Percent

Lane Capacity
Single Through Lane = 1600 Vehicles Per Hour
Single Turn Lane = 1600 Vehicles Per Hour
Dual Turn Lane = 2880 Vehicles Per Hour

LOS Definition

Total V/C	Level Of Service
Under 0.605	A
0.605 - 0.704	B
0.705 - 0.804	C
0.805 - 0.904	D
0.905 - 1.004	E
Over 1.005	F

Lost time for signal Yellow and All red intervals: 0.10 of V/C Ratio

NOTES: Since schools were not in session on the count date, existing volume was increased by 2%.

CROWN CITY ENGINEERS, CALIFORNIA

8/2/2015 - +

INTERSECTION CAPACITY UTILIZATION ANALYSIS

Location: Arden Drive and Valley Boulevard **City:** El Monte
Project No. 148-05 **Analyzed By:** PBL **File Name:** PR1

Problem Condition: Existing 2015 Traffic Volumes with Project (Count Date: 7/21/2015)
Existing Geometric Configuration

Movement	Available Lanes		Peak Hour Volumes								Movement V/C Per Lane		Critical V/C	
			Existing		Cumulative		Project		Study Vol.					
	No.	Cap.	AM	PM	AM	PM	AM	PM	AM	PM	AM	PM	AM	PM
N/B Left	0.0		7	9					7	9	0.000	0.000		
N/B Thru	1.0	1600	1	8					1	8	0.006	0.015	0.006	0.015
N/B Right	0.0		2	7					2	7	0.000	0.000		
S/B Left	2.0	2800	425	350			1	7	435	364	0.155	0.130	0.155	0.130
S/B Thru	0.0		4	8					4	8	0.000	0.000		
S/B Right	1.0	1600	137	106			2	10	142	118	0.022	0.074		
E/B Left	1.0	1600	94	133			10	3	106	139	0.066	0.087	0.066	0.087
E/B Thru	2.0	3200	551	894					562	912	0.179	0.292		
E/B Right	0.0		10	23					10	23	0.000	0.000		
W/B Left	1.0	1600	5	11					5	11	0.003	0.007		
W/B Thru	2.0	3200	956	843					975	860	0.305	0.269	0.305	0.269
W/B Right	1.0	1600	244	335			6	2	255	344	0.024	0.101		
ANALYSIS RESULTS :									Sum Of Critical V/C:				0.532	0.501
									Lost Time:				0.100	0.100
									Total V/C:				0.632	0.601
									Level Of Service:				B	A

ASSUMPTIONS AND METHODOLOGY

Existing Counts Year: 2015
Study Volume Year: 2015
Annual Growth Factor: 1.50 Percent

Lane Capacity
Single Through Lane = 1600 Vehicles Per Hour
Single Turn Lane = 1600 Vehicles Per Hour
Dual Turn Lane = 2880 Vehicles Per Hour

LOS Definition

Total V/C	Level Of Service
Under 0.605	A
0.605 - 0.704	B
0.705 - 0.804	C
0.805 - 0.904	D
0.905 - 1.004	E
Over 1.005	F

Lost time for signal Yellow and All red intervals: 0.10 of V/C Ratio

NOTES: Since schools were not in session on the count date, existing volume was increased by 2%.

CROWN CITY ENGINEERS, CALIFORNIA

8/2/2015 - +

INTERSECTION CAPACITY UTILIZATION ANALYSIS

Location: Arden Drive and Valley Boulevard **City:** El Monte
Project No. 148-05 **Analyzed By:** PBL **File Name:** PR1

Problem Condition: Future 2016 Traffic Volumes & Cumulative Projects without Project
Existing Geometric Configuration

Movement	Available Lanes		Peak Hour Volumes								Movement V/C Per Lane		Critical V/C	
			Existing		Cumulative		Project		Study Vol.					
	No.	Cap.	AM	PM	AM	PM	AM	PM	AM	PM	AM	PM	AM	PM
N/B Left	0.0		7	9	0	0			7	9	0.000	0.000		
N/B Thru	1.0	1600	1	8	0	0			1	8	0.006	0.016	0.006	0.016
N/B Right	0.0		2	7	0	0			2	7	0.000	0.000		
S/B Left	2.0	2800	425	350	65	165			505	527	0.180	0.188	0.180	0.188
S/B Thru	0.0		4	8	0	0			4	8	0.000	0.000		
S/B Right	1.0	1600	137	106	37	93			179	203	0.026	0.127		
E/B Left	1.0	1600	94	133	40	103			137	241	0.086	0.150	0.086	0.150
E/B Thru	2.0	3200	551	894	5	-87			575	839	0.183	0.269		
E/B Right	0.0		10	23	0	0			10	24	0.000	0.000		
W/B Left	1.0	1600	5	11	0	0			5	11	0.003	0.007		
W/B Thru	2.0	3200	956	843	-6	-55			984	818	0.307	0.256	0.307	0.256
W/B Right	1.0	1600	244	335	88	149			341	496	0.055	0.145		
ANALYSIS RESULTS :									Sum Of Critical V/C:				0.580	0.610
									Lost Time:				0.100	0.100
									Total V/C:				0.680	0.710
									Level Of Service:				B	C

ASSUMPTIONS AND METHODOLOGY

Existing Counts Year: 2015
Study Volume Year: 2016
Annual Growth Factor: 1.50 Percent

Lane Capacity
Single Through Lane = 1600 Vehicles Per Hour
Single Turn Lane = 1600 Vehicles Per Hour
Dual Turn Lane = 2880 Vehicles Per Hour

LOS Definition

Total V/C	Level Of Service
Under 0.605	A
0.605 - 0.704	B
0.705 - 0.804	C
0.805 - 0.904	D
0.905 - 1.004	E
Over 1.005	F

Lost time for signal Yellow and All red intervals: 0.10 of V/C Ratio

NOTES: Since schools were not in session on the count date, existing volume was increased by 2%.

CROWN CITY ENGINEERS, CALIFORNIA

8/2/2015 - +

INTERSECTION CAPACITY UTILIZATION ANALYSIS

Location: Arden Drive and Valley Boulevard **City:** El Monte
Project No. 148-05 **Analyzed By:** PBL **File Name:** PR1

Problem Condition: Future 2016 Traffic Volumes & Cumulative Projects with Project
Existing Geometric Configuration

Movement	Available Lanes		Peak Hour Volumes								Movement V/C Per Lane		Critical V/C	
			Existing		Cumulative		Project		Study Vol.					
	No.	Cap.	AM	PM	AM	PM	AM	PM	AM	PM	AM	PM	AM	PM
N/B Left	0.0		7	9	0	0			7	9	0.000	0.000		
N/B Thru	1.0	1600	1	8	0	0			1	8	0.006	0.016	0.006	0.016
N/B Right	0.0		2	7	0	0			2	7	0.000	0.000		
S/B Left	2.0	2800	425	350	65	165	1	7	506	534	0.181	0.191	0.181	0.191
S/B Thru	0.0		4	8	0	0			4	8	0.000	0.000		
S/B Right	1.0	1600	137	106	37	93	2	10	181	213	0.021	0.133		
E/B Left	1.0	1600	94	133	40	103	10	3	147	244	0.092	0.152	0.092	0.152
E/B Thru	2.0	3200	551	894	5	-87			575	839	0.183	0.269		
E/B Right	0.0		10	23	0	0			10	24	0.000	0.000		
W/B Left	1.0	1600	5	11	0	0			5	11	0.003	0.007		
W/B Thru	2.0	3200	956	843	-6	-55			984	818	0.307	0.256	0.307	0.256
W/B Right	1.0	1600	244	335	88	149	6	2	347	498	0.059	0.144		
ANALYSIS RESULTS :									Sum Of Critical V/C:				0.587	0.614
									Lost Time:				0.100	0.100
									Total V/C:				0.687	0.714
									Level Of Service:				B	C

ASSUMPTIONS AND METHODOLOGY

Existing Counts Year: 2015
Study Volume Year: 2016
Annual Growth Factor: 1.50 Percent

Lane Capacity
Single Through Lane = 1600 Vehicles Per Hour
Single Turn Lane = 1600 Vehicles Per Hour
Dual Turn Lane = 2880 Vehicles Per Hour

LOS Definition

Total V/C	Level Of Service
Under 0.605	A
0.605 - 0.704	B
0.705 - 0.804	C
0.805 - 0.904	D
0.905 - 1.004	E
Over 1.005	F

Lost time for signal Yellow and All red intervals: 0.10 of V/C Ratio

NOTES: Since schools were not in session on the count date, existing volume was increased by 2%.

CROWN CITY ENGINEERS, CALIFORNIA

8/2/2015 - +

INTERSECTION CAPACITY UTILIZATION ANALYSIS

Location: Santa Anita Avenue and Valley Boulevard **City:** El Monte
Project No. 148-05 **Analyzed By:** PBL **File Name:** PR1

Problem Condition: Existing 2015 Traffic Volumes (Count Date: 7/21/2015)
Existing Geometric Configuration

Movement	Available Lanes		Peak Hour Volumes								Movement V/C Per Lane		Critical V/C	
			Existing		Cumulative		Project		Study Vol.					
	No.	Cap.	AM	PM	AM	PM	AM	PM	AM	PM	AM	PM	AM	PM
N/B Left	2.0	2800	303	417					309	425	0.110	0.152	0.110	0.152
N/B Thru	3.0	4800	527	940					538	959	0.121	0.212		
N/B Right	0.0		43	56					44	57	0.000	0.000		
S/B Left	1.0	1600	48	63					49	64	0.031	0.040		
S/B Thru	3.0	4800	803	586					819	598	0.229	0.160	0.229	0.160
S/B Right	0.0		275	167					281	170	0.000	0.000		
E/B Left	1.0	1600	97	206					99	210	0.062	0.131	0.062	0.131
E/B Thru	2.0	3200	411	703					419	717	0.133	0.224		
E/B Right	0.0		7	1					7	1	0.000	0.000		
W/B Left	2.0	2800	64	40					65	41	0.023	0.015		
W/B Thru	2.0	3200	730	645					745	658	0.233	0.206	0.233	0.206
W/B Right	0.0		0	0					0	0	0.000	0.000		
ANALYSIS RESULTS :									Sum Of Critical V/C:				0.634	0.649
									Lost Time:				0.100	0.100
									Total V/C:				0.734	0.749
									Level Of Service:				C	C

ASSUMPTIONS AND METHODOLOGY

Existing Counts Year: 2015
Study Volume Year: 2015
Annual Growth Factor: 1.50 Percent

Lane Capacity
Single Through Lane = 1600 Vehicles Per Hour
Single Turn Lane = 1600 Vehicles Per Hour
Dual Turn Lane = 2880 Vehicles Per Hour

LOS Definition

Total V/C	Level Of Service
Under 0.605	A
0.605 - 0.704	B
0.705 - 0.804	C
0.805 - 0.904	D
0.905 - 1.004	E
Over 1.005	F

Lost time for signal Yellow and All red intervals: 0.10 of V/C Ratio

NOTES: Since schools were not in session on the count date, existing volume was increased by 2%.
Westbound right-turn volume is zero (0) due to its right-turn channel.

CROWN CITY ENGINEERS, CALIFORNIA

8/10/2015 - +

INTERSECTION CAPACITY UTILIZATION ANALYSIS

Location: Santa Anita Avenue and Valley Boulevard **City:** El Monte
Project No. 148-05 **Analyzed By:** PBL **File Name:** PR1

Problem Condition: Existing 2015 Traffic Volumes with Project (Count Date: 7/21/2015)
Existing Geometric Configuration

Movement	Available Lanes		Peak Hour Volumes								Movement V/C Per Lane		Critical V/C	
			Existing		Cumulative		Project		Study Vol.					
	No.	Cap.	AM	PM	AM	PM	AM	PM	AM	PM	AM	PM	AM	PM
N/B Left	2.0	2800	303	417			2	1	311	426	0.111	0.152	0.111	0.152
N/B Thru	3.0	4800	527	940					538	959	0.121	0.212		
N/B Right	0.0		43	56					44	57	0.000	0.000		
S/B Left	1.0	1600	48	63					49	64	0.031	0.040		
S/B Thru	3.0	4800	803	586					819	598	0.229	0.160	0.229	0.160
S/B Right	0.0		275	167					281	170	0.000	0.000		
E/B Left	1.0	1600	97	206					99	210	0.062	0.131	0.062	0.131
E/B Thru	2.0	3200	411	703			1	4	420	721	0.134	0.227		
E/B Right	0.0		7	1			0	3	7	4	0.000	0.000		
W/B Left	2.0	2800	64	40					65	41	0.023	0.015		
W/B Thru	2.0	3200	730	645			4	1	749	659	0.234	0.206	0.234	0.206
W/B Right	0.0		0	0					0	0	0.000	0.000		
ANALYSIS RESULTS :									Sum Of Critical V/C:				0.636	0.650
									Lost Time:				0.100	0.100
									Total V/C:				0.736	0.750
									Level Of Service:				C	C

ASSUMPTIONS AND METHODOLOGY

Existing Counts Year: 2015
Study Volume Year: 2015
Annual Growth Factor: 1.50 Percent

Lane Capacity
Single Through Lane = 1600 Vehicles Per Hour
Single Turn Lane = 1600 Vehicles Per Hour
Dual Turn Lane = 2880 Vehicles Per Hour

LOS Definition

Total V/C	Level Of Service
Under 0.605	A
0.605 - 0.704	B
0.705 - 0.804	C
0.805 - 0.904	D
0.905 - 1.004	E
Over 1.005	F

Lost time for signal Yellow and All red intervals: 0.10 of V/C Ratio

NOTES: Since schools were not in session on the count date, existing volume was increased by 2%.
Westbound right-turn volume is zero (0) due to its right-turn channel.

CROWN CITY ENGINEERS, CALIFORNIA

8/10/2015 - +

INTERSECTION CAPACITY UTILIZATION ANALYSIS

Location: Santa Anita Avenue and Valley Boulevard **City:** El Monte
Project No. 148-05 **Analyzed By:** PBL **File Name:** PR1

Problem Condition: Future 2016 Traffic Volumes & Cumulative Projects without Project
Existing Geometric Configuration

Movement	Available Lanes		Peak Hour Volumes								Movement V/C Per Lane		Critical V/C	
			Existing		Cumulative		Project		Study Vol.					
	No.	Cap.	AM	PM	AM	PM	AM	PM	AM	PM	AM	PM	AM	PM
N/B Left	2.0	2800	303	417	262	310			576	742	0.206	0.265	0.206	0.265
N/B Thru	3.0	4800	527	940	145	114			691	1087	0.153	0.237		
N/B Right	0.0		43	56	1	(6)			46	52	0.000	0.000		
S/B Left	1.0	1600	48	63	9	(48)			59	17	0.037	0.011		
S/B Thru	3.0	4800	803	586	177	166			1008	773	0.271	0.200	0.271	0.200
S/B Right	0.0		275	167	8	13			293	186	0.000	0.000		
E/B Left	1.0	1600	97	206	6	14			106	227	0.067	0.142	0.067	0.142
E/B Thru	2.0	3200	411	703	55	38			481	766	0.157	0.251		
E/B Right	0.0		7	1	15	35			22	36	0.000	0.000		
W/B Left	2.0	2800	64	40	6	(30)			72	11	0.026	0.004		
W/B Thru	2.0	3200	730	645	64	59			820	727	0.256	0.227	0.256	0.227
W/B Right	0.0		0	0	0	0			0	0	0.000	0.000		
ANALYSIS RESULTS :									Sum Of Critical V/C:				0.799	0.834
									Lost Time:				0.100	0.100
									Total V/C:				0.899	0.934
									Level Of Service:				D	E

ASSUMPTIONS AND METHODOLOGY

Existing Counts Year: 2015
Study Volume Year: 2016
Annual Growth Factor: 1.50 Percent

Lane Capacity
Single Through Lane = 1600 Vehicles Per Hour
Single Turn Lane = 1600 Vehicles Per Hour
Dual Turn Lane = 2880 Vehicles Per Hour

LOS Definition

Total V/C	Level Of Service
Under 0.605	A
0.605 - 0.704	B
0.705 - 0.804	C
0.805 - 0.904	D
0.905 - 1.004	E
Over 1.005	F

Lost time for signal Yellow and All red intervals: 0.10 of V/C Ratio

NOTES: Since schools were not in session on the count date, existing volume was increased by 2%.
Westbound right-turn volume is zero (0) due to its right-turn channel.

CROWN CITY ENGINEERS, CALIFORNIA

8/10/2015 - +

INTERSECTION CAPACITY UTILIZATION ANALYSIS

Location: Santa Anita Avenue and Valley Boulevard **City:** El Monte
Project No. 148-05 **Analyzed By:** PBL **File Name:** PR1

Problem Condition: Future 2016 Traffic Volumes & Cumulative Projects with Project
Existing Geometric Configuration

Movement	Available Lanes		Peak Hour Volumes								Movement V/C Per Lane		Critical V/C	
			Existing		Cumulative		Project		Study Vol.					
	No.	Cap.	AM	PM	AM	PM	AM	PM	AM	PM	AM	PM	AM	PM
N/B Left	2.0	2800	303	417	262	310	2	1	578	743	0.206	0.265	0.206	0.265
N/B Thru	3.0	4800	527	940	145	114			691	1087	0.153	0.237		
N/B Right	0.0		43	56	1	(6)			46	52	0.000	0.000		
S/B Left	1.0	1600	48	63	9	(48)			59	17	0.037	0.011		
S/B Thru	3.0	4800	803	586	177	166			1008	773	0.271	0.200	0.271	0.200
S/B Right	0.0		275	167	8	13			293	186	0.000	0.000		
E/B Left	1.0	1600	97	206	6	14			106	227	0.067	0.142	0.067	0.142
E/B Thru	2.0	3200	411	703	55	38	1	4	482	770	0.157	0.253		
E/B Right	0.0		7	1	15	35	0	3	22	39	0.000	0.000		
W/B Left	2.0	2800	64	40	6	(30)			72	11	0.026	0.004		
W/B Thru	2.0	3200	730	645	64	59	4	1	824	728	0.257	0.227	0.257	0.227
W/B Right	0.0		0	0	0	0			0	0	0.000	0.000		
ANALYSIS RESULTS :									Sum Of Critical V/C:				0.801	0.834
									Lost Time:				0.100	0.100
									Total V/C:				0.901	0.934
									Level Of Service:				D	E

ASSUMPTIONS AND METHODOLOGY

Existing Counts Year: 2015
Study Volume Year: 2016
Annual Growth Factor: 1.50 Percent

Lane Capacity
Single Through Lane = 1600 Vehicles Per Hour
Single Turn Lane = 1600 Vehicles Per Hour
Dual Turn Lane = 2880 Vehicles Per Hour

LOS Definition

Total V/C	Level Of Service
Under 0.605	A
0.605 - 0.704	B
0.705 - 0.804	C
0.805 - 0.904	D
0.905 - 1.004	E
Over 1.005	F

Lost time for signal Yellow and All red intervals: 0.10 of V/C Ratio

NOTES: Since schools were not in session on the count date, existing volume was increased by 2%.
Westbound right-turn volume is zero (0) due to its right-turn channel.

CROWN CITY ENGINEERS, CALIFORNIA

8/10/2015 - +

Intersection	
Intersection Delay, s/veh	1.1

Movement	WBL	WBR	NBT	NBR	SBL	SBT
Vol, veh/h	60	5	270	79	7	590
Conflicting Peds, #/hr	0	0	0	0	0	0
Sign Control	Stop	Stop	Free	Free	Free	Free
RT Channelized	-	None	-	None	-	None
Storage Length	0	-	-	-	-	-
Veh in Median Storage, #	0	-	0	-	-	0
Grade, %	0	-	0	-	-	0
Peak Hour Factor	92	92	92	92	92	92
Heavy Vehicles, %	2	2	2	2	2	2
Mvmt Flow	65	5	293	86	8	641

Major/Minor	Minor1		Major1		Major2	
Conflicting Flow All	672	190	0	0	379	0
Stage 1	336	-	-	-	-	-
Stage 2	336	-	-	-	-	-
Follow-up Headway	3.52	3.32	-	-	2.22	-
Pot Capacity-1 Maneuver	389	820	-	-	1176	-
Stage 1	696	-	-	-	-	-
Stage 2	696	-	-	-	-	-
Time blocked-Platoon, %			-	-		-
Mov Capacity-1 Maneuver	385	820	-	-	1176	-
Mov Capacity-2 Maneuver	385	-	-	-	-	-
Stage 1	696	-	-	-	-	-
Stage 2	688	-	-	-	-	-

Approach	WB	NB	SB
HCM Control Delay, s	15.9	0	0.1
HCM LOS	C		

Minor Lane / Major Mvmt	NBT	NBR	WBLn1	SBL	SBT
Capacity (veh/h)	-	-	401	1176	-
HCM Lane V/C Ratio	-	-	0.176	0.006	-
HCM Control Delay (s)	-	-	15.9	8.081	0
HCM Lane LOS			C	A	A
HCM 95th %tile Q(veh)	-	-	0.632	0.02	-

Notes
~ : Volume Exceeds Capacity; $: Delay Exceeds 300 Seconds; Error : Computation Not Defined

Intersection	
Intersection Delay, s/veh	1.1

Movement	WBL	WBR	NBT	NBR	SBL	SBT
Vol, veh/h	50	11	568	44	4	365
Conflicting Peds, #/hr	0	0	0	0	0	0
Sign Control	Stop	Stop	Free	Free	Free	Free
RT Channelized	-	None	-	None	-	None
Storage Length	0	-	-	-	-	-
Veh in Median Storage, #	0	-	0	-	-	0
Grade, %	0	-	0	-	-	0
Peak Hour Factor	92	92	92	92	92	92
Heavy Vehicles, %	2	2	2	2	2	2
Mvmt Flow	54	12	617	48	4	397

Major/Minor	Minor1		Major1		Major2	
Conflicting Flow All	848	333	0	0	665	0
Stage 1	641	-	-	-	-	-
Stage 2	207	-	-	-	-	-
Follow-up Headway	3.52	3.32	-	-	2.22	-
Pot Capacity-1 Maneuver	300	663	-	-	920	-
Stage 1	487	-	-	-	-	-
Stage 2	807	-	-	-	-	-
Time blocked-Platoon, %			-	-		-
Mov Capacity-1 Maneuver	298	663	-	-	920	-
Mov Capacity-2 Maneuver	298	-	-	-	-	-
Stage 1	487	-	-	-	-	-
Stage 2	802	-	-	-	-	-

Approach	WB	NB	SB
HCM Control Delay, s	18.6	0	0.1
HCM LOS	C		

Minor Lane / Major Mvmt	NBT	NBR	WBLn1	SBL	SBT
Capacity (veh/h)	-	-	331	920	-
HCM Lane V/C Ratio	-	-	0.2	0.005	-
HCM Control Delay (s)	-	-	18.6	8.932	0
HCM Lane LOS			C	A	A
HCM 95th %tile Q(veh)	-	-	0.735	0.014	-

Notes
~ : Volume Exceeds Capacity; $: Delay Exceeds 300 Seconds; Error : Computation Not Defined

Intersection	
Intersection Delay, s/veh	1.3

Movement	WBL	WBR	NBT	NBR	SBL	SBT
Vol, veh/h	63	7	270	95	12	590
Conflicting Peds, #/hr	0	0	0	0	0	0
Sign Control	Stop	Stop	Free	Free	Free	Free
RT Channelized	-	None	-	None	-	None
Storage Length	0	-	-	-	-	-
Veh in Median Storage, #	0	-	0	-	-	0
Grade, %	0	-	0	-	-	0
Peak Hour Factor	92	92	92	92	92	92
Heavy Vehicles, %	2	2	2	2	2	2
Mvmt Flow	68	8	293	103	13	641

Major/Minor	Minor1		Major1		Major2	
Conflicting Flow All	692	198	0	0	397	0
Stage 1	345	-	-	-	-	-
Stage 2	347	-	-	-	-	-
Follow-up Headway	3.52	3.32	-	-	2.22	-
Pot Capacity-1 Maneuver	378	810	-	-	1158	-
Stage 1	688	-	-	-	-	-
Stage 2	687	-	-	-	-	-
Time blocked-Platoon, %			-	-		-
Mov Capacity-1 Maneuver	372	810	-	-	1158	-
Mov Capacity-2 Maneuver	372	-	-	-	-	-
Stage 1	688	-	-	-	-	-
Stage 2	675	-	-	-	-	-

Approach	WB	NB	SB
HCM Control Delay, s	16.3	0	0.3
HCM LOS	C		

Minor Lane / Major Mvmt	NBT	NBR	WBLn1	SBL	SBT
Capacity (veh/h)	-	-	393	1158	-
HCM Lane V/C Ratio	-	-	0.194	0.011	-
HCM Control Delay (s)	-	-	16.3	8.144	0.1
HCM Lane LOS			C	A	A
HCM 95th %tile Q(veh)	-	-	0.708	0.034	-

Notes
~ : Volume Exceeds Capacity; $: Delay Exceeds 300 Seconds; Error : Computation Not Defined

Intersection	
Intersection Delay, s/veh	1.6

Movement	WBL	WBR	NBT	NBR	SBL	SBT
Vol, veh/h	67	15	568	49	6	365
Conflicting Peds, #/hr	0	0	0	0	0	0
Sign Control	Stop	Stop	Free	Free	Free	Free
RT Channelized	-	None	-	None	-	None
Storage Length	0	-	-	-	-	-
Veh in Median Storage, #	0	-	0	-	-	0
Grade, %	0	-	0	-	-	0
Peak Hour Factor	92	92	92	92	92	92
Heavy Vehicles, %	2	2	2	2	2	2
Mvmt Flow	73	16	617	53	7	397

Major/Minor	Minor1		Major1		Major2	
Conflicting Flow All	855	335	0	0	671	0
Stage 1	644	-	-	-	-	-
Stage 2	211	-	-	-	-	-
Follow-up Headway	3.52	3.32	-	-	2.22	-
Pot Capacity-1 Maneuver	297	661	-	-	915	-
Stage 1	485	-	-	-	-	-
Stage 2	804	-	-	-	-	-
Time blocked-Platoon, %			-	-		-
Mov Capacity-1 Maneuver	294	661	-	-	915	-
Mov Capacity-2 Maneuver	294	-	-	-	-	-
Stage 1	485	-	-	-	-	-
Stage 2	796	-	-	-	-	-

Approach	WB	NB	SB
HCM Control Delay, s	20.1	0	0.1
HCM LOS	C		

Minor Lane / Major Mvmt	NBT	NBR	WBLn1	SBL	SBT
Capacity (veh/h)	-	-	327	915	-
HCM Lane V/C Ratio	-	-	0.273	0.007	-
HCM Control Delay (s)	-	-	20.1	8.963	0
HCM Lane LOS			C	A	A
HCM 95th %tile Q(veh)	-	-	1.085	0.022	-

Notes
~ : Volume Exceeds Capacity; $: Delay Exceeds 300 Seconds; Error : Computation Not Defined

Intersection	
Intersection Delay, s/veh	1.1

Movement	WBL	WBR	NBT	NBR	SBL	SBT
Vol, veh/h	61	5	274	80	7	598
Conflicting Peds, #/hr	0	0	0	0	0	0
Sign Control	Stop	Stop	Free	Free	Free	Free
RT Channelized	-	None	-	None	-	None
Storage Length	0	-	-	-	-	-
Veh in Median Storage, #	0	-	0	-	-	0
Grade, %	0	-	0	-	-	0
Peak Hour Factor	92	92	92	92	92	92
Heavy Vehicles, %	2	2	2	2	2	2
Mvmt Flow	66	5	298	87	8	650

Major/Minor	Minor1		Major1		Major2	
Conflicting Flow All	681	192	0	0	385	0
Stage 1	341	-	-	-	-	-
Stage 2	340	-	-	-	-	-
Follow-up Headway	3.52	3.32	-	-	2.22	-
Pot Capacity-1 Maneuver	384	817	-	-	1170	-
Stage 1	692	-	-	-	-	-
Stage 2	692	-	-	-	-	-
Time blocked-Platoon, %			-	-		-
Mov Capacity-1 Maneuver	380	817	-	-	1170	-
Mov Capacity-2 Maneuver	380	-	-	-	-	-
Stage 1	692	-	-	-	-	-
Stage 2	684	-	-	-	-	-

Approach	WB	NB	SB
HCM Control Delay, s	16.1	0	0.1
HCM LOS	C		

Minor Lane / Major Mvmt	NBT	NBR	WBLn1	SBL	SBT
Capacity (veh/h)	-	-	396	1170	-
HCM Lane V/C Ratio	-	-	0.181	0.007	-
HCM Control Delay (s)	-	-	16.1	8.097	0
HCM Lane LOS			C	A	A
HCM 95th %tile Q(veh)	-	-	0.653	0.02	-

Notes
~ : Volume Exceeds Capacity; $: Delay Exceeds 300 Seconds; Error : Computation Not Defined

Intersection	
Intersection Delay, s/veh	1.1

Movement	WBL	WBR	NBT	NBR	SBL	SBT
Vol, veh/h	51	11	577	45	4	371
Conflicting Peds, #/hr	0	0	0	0	0	0
Sign Control	Stop	Stop	Free	Free	Free	Free
RT Channelized	-	None	-	None	-	None
Storage Length	0	-	-	-	-	-
Veh in Median Storage, #	0	-	0	-	-	0
Grade, %	0	-	0	-	-	0
Peak Hour Factor	92	92	92	92	92	92
Heavy Vehicles, %	2	2	2	2	2	2
Mvmt Flow	55	12	627	49	4	403

Major/Minor	Minor1		Major1		Major2	
Conflicting Flow All	862	338	0	0	676	0
Stage 1	652	-	-	-	-	-
Stage 2	210	-	-	-	-	-
Follow-up Headway	3.52	3.32	-	-	2.22	-
Pot Capacity-1 Maneuver	294	658	-	-	911	-
Stage 1	480	-	-	-	-	-
Stage 2	805	-	-	-	-	-
Time blocked-Platoon, %			-	-		-
Mov Capacity-1 Maneuver	292	658	-	-	911	-
Mov Capacity-2 Maneuver	292	-	-	-	-	-
Stage 1	480	-	-	-	-	-
Stage 2	800	-	-	-	-	-

Approach	WB	NB	SB
HCM Control Delay, s	19	0	0.1
HCM LOS	C		

Minor Lane / Major Mvmt	NBT	NBR	WBLn1	SBL	SBT
Capacity (veh/h)	-	-	324	911	-
HCM Lane V/C Ratio	-	-	0.208	0.005	-
HCM Control Delay (s)	-	-	19	8.971	0
HCM Lane LOS			C	A	A
HCM 95th %tile Q(veh)	-	-	0.769	0.014	-

Notes
~ : Volume Exceeds Capacity; $: Delay Exceeds 300 Seconds; Error : Computation Not Defined

Intersection	
Intersection Delay, s/veh	1.3

Movement	WBL	WBR	NBT	NBR	SBL	SBT
Vol, veh/h	64	7	274	96	12	598
Conflicting Peds, #/hr	0	0	0	0	0	0
Sign Control	Stop	Stop	Free	Free	Free	Free
RT Channelized	-	None	-	None	-	None
Storage Length	0	-	-	-	-	-
Veh in Median Storage, #	0	-	0	-	-	0
Grade, %	0	-	0	-	-	0
Peak Hour Factor	92	92	92	92	92	92
Heavy Vehicles, %	2	2	2	2	2	2
Mvmt Flow	70	8	298	104	13	650

Major/Minor	Minor1		Major1		Major2	
Conflicting Flow All	701	201	0	0	402	0
Stage 1	350	-	-	-	-	-
Stage 2	351	-	-	-	-	-
Follow-up Headway	3.52	3.32	-	-	2.22	-
Pot Capacity-1 Maneuver	373	806	-	-	1153	-
Stage 1	684	-	-	-	-	-
Stage 2	684	-	-	-	-	-
Time blocked-Platoon, %			-	-		-
Mov Capacity-1 Maneuver	366	806	-	-	1153	-
Mov Capacity-2 Maneuver	366	-	-	-	-	-
Stage 1	684	-	-	-	-	-
Stage 2	672	-	-	-	-	-

Approach	WB	NB	SB
HCM Control Delay, s	16.6	0	0.3
HCM LOS	C		

Minor Lane / Major Mvmt	NBT	NBR	WBLn1	SBL	SBT
Capacity (veh/h)	-	-	387	1153	-
HCM Lane V/C Ratio	-	-	0.199	0.011	-
HCM Control Delay (s)	-	-	16.6	8.158	0.1
HCM Lane LOS			C	A	A
HCM 95th %tile Q(veh)	-	-	0.733	0.034	-

Notes
~ : Volume Exceeds Capacity; $: Delay Exceeds 300 Seconds; Error : Computation Not Defined

Intersection	
Intersection Delay, s/veh	1.6

Movement	WBL	WBR	NBT	NBR	SBL	SBT
Vol, veh/h	68	15	577	50	6	371
Conflicting Peds, #/hr	0	0	0	0	0	0
Sign Control	Stop	Stop	Free	Free	Free	Free
RT Channelized	-	None	-	None	-	None
Storage Length	0	-	-	-	-	-
Veh in Median Storage, #	0	-	0	-	-	0
Grade, %	0	-	0	-	-	0
Peak Hour Factor	92	92	92	92	92	92
Heavy Vehicles, %	2	2	2	2	2	2
Mvmt Flow	74	16	627	54	7	403

Major/Minor	Minor1		Major1		Major2	
Conflicting Flow All	869	341	0	0	682	0
Stage 1	654	-	-	-	-	-
Stage 2	215	-	-	-	-	-
Follow-up Headway	3.52	3.32	-	-	2.22	-
Pot Capacity-1 Maneuver	291	655	-	-	907	-
Stage 1	479	-	-	-	-	-
Stage 2	800	-	-	-	-	-
Time blocked-Platoon, %			-	-		-
Mov Capacity-1 Maneuver	288	655	-	-	907	-
Mov Capacity-2 Maneuver	288	-	-	-	-	-
Stage 1	479	-	-	-	-	-
Stage 2	792	-	-	-	-	-

Approach	WB	NB	SB
HCM Control Delay, s	20.6	0	0.1
HCM LOS	C		

Minor Lane / Major Mvmt	NBT	NBR	WBLn1	SBL	SBT
Capacity (veh/h)	-	-	320	907	-
HCM Lane V/C Ratio	-	-	0.282	0.007	-
HCM Control Delay (s)	-	-	20.6	8.998	0
HCM Lane LOS			C	A	A
HCM 95th %tile Q(veh)	-	-	1.133	0.022	-

Notes
~ : Volume Exceeds Capacity; $: Delay Exceeds 300 Seconds; Error : Computation Not Defined

APPENDIX C
TRUCK TURING TEMPLATE ANALYSIS

TRUCK TURNING TEMPLATE ANALYSIS
AT THE ARDEN DR. AND HICKSON ST. INTERSECTION
FOR INTERSTATE SEMITRAILER (W-20 [W-65 AND W-67]) DESIGN VEHICLE

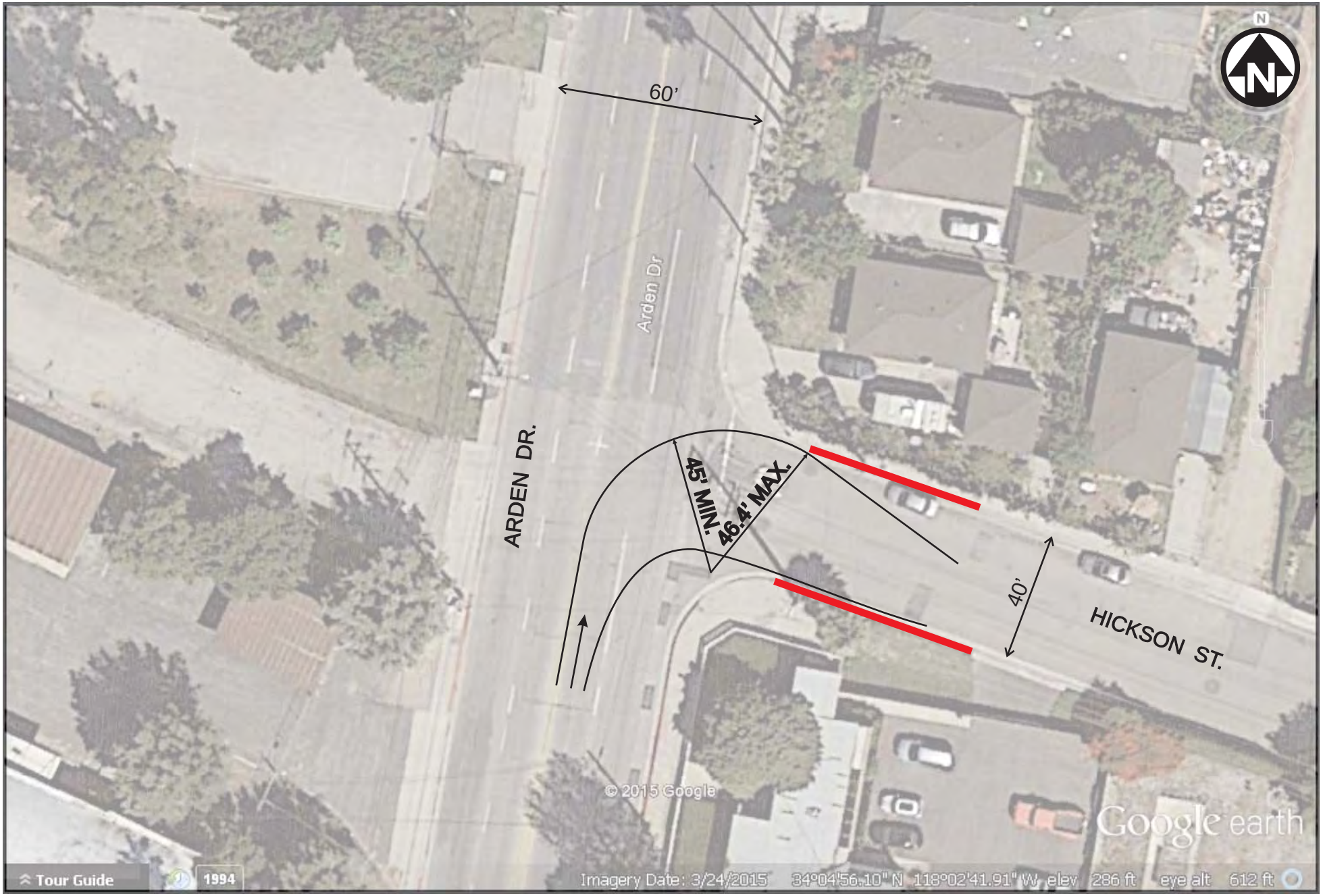

TRUCK TURNING TEMPLATE ANALYSIS
AT THE ARDEN DR. AND HICKSON ST. INTERSECTION
FOR INTERSTATE SEMITRAILER (W-20 [W-65 AND W-67]) DESIGN VEHICLE